VAG KLAMFLEX

The Largest Manufacturer of Pipe Couplings, Flange Adaptors, Stepped Couplings, Dismantling Joints and related products in the Southern Hemisphere

ISSUE 16/01

CERTIFICATION AND ACCREDITATION

TYPICAL CERTIFICATION AND ACCREDITATION

SABS ISO 9001

ARPAL

WRAS APPROVED PRODUCT

COMPANY PROFILE

Established in 1962 the company is now the largest manufacturer of Pipe Couplings, Flange Adaptors, Stepped Couplings, Dismantling Joints and related products in the Southern Hemisphere. During the period to 1992 the company manufactured Viking Johnson products under a license agreement with the Victaulic Company of the U.K., the termination of which saw the emergence of KLAMFLEX as a leading international brand name.

KLAMFLEX employs and utilizes experts in the field of pipe jointing and sealing, making sure that our customers receive expert product development, design, quality, assistance and advice at all times.

KLAMFLEX is an ISO 9001:2008 listed company, stringent raw material quality control, quality inspection at all phases of production and hydrostatic test facilities bare testimony to our emphasis on Quality Products.

KLAMFLEX products are manufactured in accordance with AWWA C219 in our factory site which includes the following:

- Modern shot blasting facilities
- Modern fusion bonded epoxy plants for spray and fluidised bed application
- State of the art CNC controlled sleeve rolling line
- Customised follower rolling machines, CNC controlled for high precision production and quality
- Latest plasma cutting equipment for fabricated specials

KLAMFLEX listings and international approvals include:

- ARPAL approved since August 2002
- SANS South African Bureau of Standards Certification of Registration
- WRAS (Water Regulations Advisory Scheme) for Coatings
- WRAS (Water Regulations Advisory Scheme) for Rubber

VAG
KLAMFLEX

The Largest Manufacturer of Pipe Couplings, Flange Adaptors, Stepped Couplings, Dismantling Joints and related products in the Southern Hemisphere

Product Features

Hot rolled asymmetric steel T section free from welds providing integral strength. The offset T profile facilitates a perfect seal on the gasket and straight line bolt travel

Profile rolled steel sleeve allows angular deflection of the pipe ends due to a thinner mid section, the rolled sleeve ends match the gasket profile exactly

Non toxic EPDM WRAS approved gaskets with self centering lip on Dedicated Products

"D" and Square cup low carbon steel bolts which are also available in 304 and 316 SS

Non toxic WRAS approved fusion bonded epoxy coatings

Added Product Features

- Ranger Couplings can join pipes with the same or different pipe outside diameters
- Ranger Flange Adaptors are multi drilled and can accommodate most flange drillings
- Ranger gaskets allow for thermal expansion and contraction of up to 5mm per gasket
- Double and Full Sleeves can be supplied on Couplings and Flange Adaptors for GRP and HDPE pipes
- Harness Couplings to prevent pipe separation can be manufactured
- Fixed Centre Registers can be supplied with Couplings 300mm and below and Fixed or Removable Centre Registers can be supplied with Couplings 350mm and above
- Products can be manufactured to accommodate pressures higher than 16 bar
- Products can be manufactured to accommodate metric and imperial dimensions
- Products can be coated in Red Oxide, Fusion Bonded Epoxy and Galvanized when required, alternative coatings to customer specification are available on request

This product manual covers KLAMFLEX'S standard range of products as tabulated below:

- DN50 to DN600 - PN40
- DN50 to DN1000 - PN25
- DN50 to DN1600 - PN16
- DN50 to DN2400 - PN10
- DN50 to DN3000 - PN6

Details of non-standard products are available on request.

Index

CATEGORY	PAGE
RANGER COUPLING	04 - 06
RANGER STEP COUPLING	07 - 08
GRIPPER COUPLING	09 - 10
DEDICATED COUPLING	11 - 16
CENTRE REGISTER	17
DEDICATED STEP COUPLING	18 - 19
SHOULDERED COUPLING	20
RANGER FLANGE ADAPTOR	21 - 23
GRIPPER FLANGE ADAPTOR	24 - 25
DEDICATED FLANGE ADAPTOR	26 - 31
DISMANTLING JOINT	32 - 35
JUNIOR COUPLING	36
RANGER END CAP	37 - 38
TECHNICAL MANUAL	40 - 54

SABS ISO 9001

ARPAL

WRAS APPROVED PRODUCT

RANGER COUPLINGS - RC

Product Features

KLAMFLEX Ranger Couplings (mark holder of SANS 1808-2), in the form of Wide Range Couplings are designed to join pipes of various outside diameters with the same or different nominal bore. Because of the wide range tolerance on OD (Up to 23mm) a single KLAMFLEX Ranger Coupling can connect steel, ductile iron, UPVC, cast iron, asbestos cement and other rigid pipe materials. This eliminates on site guesswork and stock range holdings are optimised. The ability of KLAMFLEX Ranger Couplings to join dissimilar pipe materials is a bonus feature in both repair or permanent situations.

Corrosion protection for KLAMFLEX Ranger Coupling is available in Fusion Bonded Epoxy, Red Oxide Primer and Galvanised finish as standard. Optional coatings to customer specifications are available on request. KLAMFLEX Ranger Couplings have applications in the reticulation of potable water, waste water and sewage as well as in the marine, mining, oil, gas and general engineering sectors. Moulded, circumferentially ribbed or specially profiled gaskets, generally in EPDM or NBR materials, provide for smooth installation by minimising contact friction. KLAMFLEX Ranger Coupling Gaskets are designed to provide a leak tight seal across the O.D range per nominal size and still allow for thermal expansion and contraction of the pipe up to 5mm per gasket, facilitated through gasket deformation. To facilitate installation and avoid possible creep under rising load, it is strongly recommended that the KLAMFLEX Ranger Coupling Rubber Sealing Gaskets are well lubricated with a suitable non-toxic soap solution before the introduction of the pipe. This practice should obviate the need for re-tightening the fasteners after pressure testing, and further facilitate the seating of the joint components. KLAMFLEX Ranger Couplings can be manufactured with double sleeves to prevent end pull-out on PE, HDPE and GRP pipes.

KLAMFLEX Ranger Couplings are NOT DESIGNED TO RESIST END LOAD due to pressure forces and therefore such forces must normally be resisted by other means.

NUTS & BOLTS

Galvanised low carbon steel bolts and nuts (Stainless Steel on request)

RUBBER & COATING

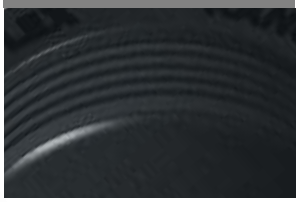

Non-toxic WRAS approved (EPDM rubber - Non-toxic and FBE to 300 micron coating)

SLEEVE

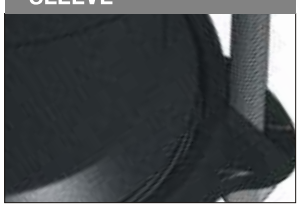

Rolled steel

END RINGS

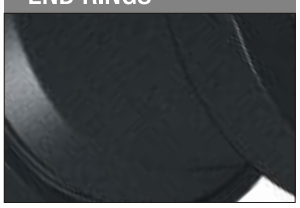

Ductile iron

Ranger Coupling - RC

DN50 to DN600 (PN16)

Specifications

DN (mm)	Pipe OD (mm)	Approx. Mass (kg)	Pipe Material Suitability
50/2	59-72	3	STEEL (imperial+metric), UPVC, DI, CI, AC (imperial), ABS/DWV
65/2.5	72-85	3	STEEL (imperial+metric), UPVC, DI, CI, AC (imperial), ABS/DWV
80/3	88-103	4	STEEL (imperial+metric), UPVC, DI, CI, AC (imperial), ABS/DWV
100/4	109-128	5	STEEL (imperial+metric), UPVC, DI, CI, AC (cod), AC (imperial), GRP
125/5	138-153	5	STEEL (imperial+metric), UPVC, DI, CI, AC (cod), AC (imperial)
150/6	150-170	7	STEEL (imperial+metric), UPVC, DI, GRP, AC (cod), AC (cid)
150/6	159-182	7	STEEL (imperial+metric), UPVC, DI, CI, AC (cod), AC (cid), AC (imperial), GRP
175/7	192-210	9	STEEL (imperial+metric), UPVC, CI, AC (imperial)
200/8	218-235	10	STEEL (imperial+metric), UPVC, DI, CI, AC (cod), AC (cid), AC (imperial), GRP
225/9	230-247	17	STEEL (imperial+metric), DI, AC (cod), AC (cid), AC (imperial)
225/9	242-262	13	UPVC, AC (cid)
250/10	250-267	18	STEEL (imperial+metric), UPVC, AC (cid)
250/10	272-289	16	STEEL (imperial+metric), UPVC, DI, CI, AC (cod), AC (cid), AC (imperial), GRP
300/12	315-332	24	STEEL (imperial+metric), UPVC, DI, GRP
300/12	322-340	20	STEEL (imperial+metric), DI, AC Class 12
300/12	340-360	17	UPVC, DI, AC (cod), AC (cid), AC (Metric), CI
350/14	351-378	17	STEEL (imperial+metric), UPVC, AC (cid), AC (metric), CI
350/14	374-391	28	DI, GRP, AC Class 6
400/16	390-410	18	STEEL (imperial+metric), UPVC, AC (cid), AC (metric), CI
400/16	417-437	26	DI, AC Class 6 and 12
450/18	454-460	35	STEEL, AC Class 18
450/18	476-493	40	DI, AC (cid), AC (metric), AC Class 6 and 12, Imperial CI/CL
450/18	480-500	33	DI, AC Class 6 and 12, UPVC
500/20	500-508	51	UPVC, Steel, AC (cod), AC (cid)
500/20	526-546	35	DI, AC Class 6 and 12
600/24	608-636	62	STEEL (imperial+metric), GRP, CI
600/24	628-650	46	DI, AC Class 6, Imperial CI/CL

MAX WORKING PRESSURE: 16 BAR
SETTING GAP: 14 - 38mm (size dependant)
TOLERANCE ON ANGULAR DEFLECTION: 6 DEGREES
EXPANSION & CONTRACTION RANGE: 0 -10mm
RECOMMENDED BOLT TORQUE: 60 - 80 Nm
FOR COUPLINGS OF 25 & 40 BAR WORKING PRESSURE PLEASE REFER TO DEDICATED COUPLINGS

Materials of Construction - See Table 5 of Technical Manual

Ranger Coupling - RC

DN50 to DN600 (PN 16)

Dimensions

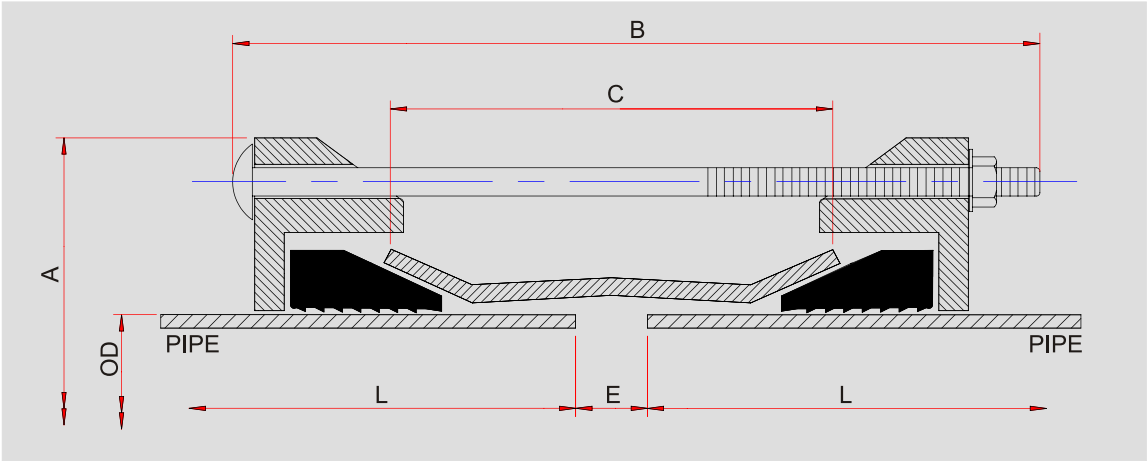

NOMINAL BORE	DN		65	80	100	125	150	150	175	200
Pipe Dia. Range	OD		59 - 72	72 - 85	88 - 103	109 - 128	138 - 153	150 - 170	159 - 182	192 - 210
End Ring Dia.	A		165	180	200	225	250	260	290	315
Coupling Length	B		185	185	185	185	185	185	210	230
Sleeve Width	C		95	95	95	100	100	100	100	130
Setting Gap	E		14	19	19	19	19	19	19	19
Min. Pipe Prep. Length	L		100	100	100	100	100	100	100	100
Bolting			2-M12x175	2-M12x175	4-M12x175	4-M12x175	4-M12x175	4-M12x175	4-M12x200	4-M12x220

NOMINAL BORE	DN	225	225	250	250	300	300	300	350	350
Pipe Dia. Range	OD	218 - 235	242 - 262	250 - 267	272 - 289	315 - 332	322 - 340	340 - 360	374 - 391	390 - 410
End Ring Dia.	A	340	355	376	412	450	455	460	510	570
Coupling Length	B	230	230	230	230	230	210	230	230	260
Sleeve Width	C	130	130	130	130	130	130	130	150	150
Setting Gap	E	19	19	19	19	19	19	19	19	19
Min. Pipe Prep. Length	L	100	100	100	100	100	100	100	150	150
Bolting		4-M12x220	6-M12x220	6-M12x220	6-M12x220	6-M12x220	6-M12x200	6-M12x220	8-M12x220	8-M12x250

NOMINAL BORE	DN	400	400	450	450	450	500	500	600	600
Pipe Dia. Range	OD	410 -436	417 - 437	454 - 463	476 - 500	480 -500	500 - 508	526 - 546	608 - 636	630 - 650
End Ring Dia.	A	550	550	580	600	623	610	660	750	780
Coupling Length	B	270	270	270	270	270	270	270	270	270
Sleeve Width	C	150	150	150	150	150	150	150	150	150
Setting Gap	E	19	19	19	19	19	19	19	19	19
Min. Pipe Prep. Length	L	150	150	150	150	150	150	150	150	150
Bolting		8-M12x260	8-M12x260	8-M12x260	8-M12x260	10-M12x260	10-M12x260	10-M12x260	10-M12x260	10-M12x260

RANGER STEP COUPLING - RS

Product Features

KLAMFLEX Ranger Step Couplings, in the form of Wide Range Couplings, are designed to join pipes of various outside diameters with the same or different nominal bore. Because of the wide range tolerance on OD a single KLAMFLEX Ranger Step Coupling can connect steel, ductile iron, UPVC, cast iron, asbestos cement and other rigid pipe materials. This eliminates on site guesswork and stock range holdings are optimised. The ability of KLAMFLEX Ranger Step Couplings to join dissimilar pipe materials is a bonus feature in both repair or permanent situations.

Corrosion protection for KLAMFLEX Ranger Coupling is available in Fusion Bonded Epoxy, Red Oxide Primer and Galvanised finish as standard. Optional coatings to customer specifications are available on request. KLAMFLEX Ranger Couplings have applications in the reticulation of potable water, waste water and sewage as well as in the marine, mining, oil, gas and general engineering sectors. Moulded, circumferentially ribbed or specially profiled gaskets, generally in EPDM or NBR materials, provide for smooth installation by minimising contact friction. KLAMFLEX Ranger Step Coupling Gaskets are designed to provide a leak tight seal across the O.D range per nominal size and still allow for thermal expansion and contraction of the pipe up to 5mm per gasket, facilitated through gasket deformation.

To facilitate installation and avoid possible creep under rising load, it is strongly recommended that the KLAMFLEX Ranger Step Coupling Rubber Sealing Gaskets are well lubricated with a suitable non-toxic soap solution before the introduction of the pipe. This practice should obviate the need for re-tightening the fasteners after pressure testing, and further facilitate the seating of the joint components. KLAMFLEX VARIplus-RSC Ranger Step Coupling can be manufactured with double or full sleeves to prevent end pull-out on PE, HDPE and GRP pipes.

KLAMFLEX Ranger Step Couplings are NOT DESIGNED TO RESIST END LOAD due to pressure forces and therefore such forces must normally be resisted by other means.

NUTS & BOLTS

Galvanised low carbon steel bolts and nuts (Stainless Steel on request)

RUBBER & COATING

Non-toxic WRAS approved (EPDM rubber - Non-toxic and FBE to 300 micron coating)

SLEEVE

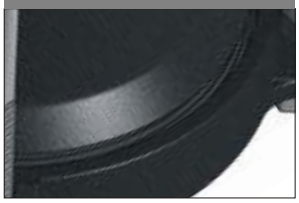

Rolled steel

END RING

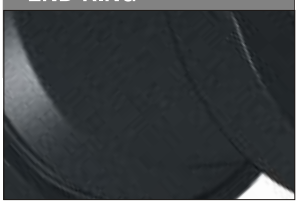

Ductile iron

Ranger Step Coupling - RS

DN50 to DN250 (PN16)

Specifications

DN (mm)	Pipe OD Range (mm)	Approx. Mass (kg)
50/65	59-72 / 72-85	2.6
80/100	88-103 / 109-128	4.6
100/125	109-128 / 138-153	5.2
125/150	138-153 / 159-182	6.4
150/175	159-182 / 192-210	7.2
175/200	192-210 / 218-235	12.4
200/200+	218-235 / 230-247	16.8
250/250+	250-267 / 272-289	22.4

MAX WORKING PRESSURE: 16 BAR
SETTING GAP: 19mm
TOLERANCE ON ANGULAR DEFLECTION: 6 DEGREES
EXPANSION & CONTRACTION RANGE: 0-10mm
RECOMMENDED BOLT TORQUE: 60 - 80 Nm
FOR COUPLINGS OF 25 & 40 BAR WORKING PRESSURE PLEASE REFER TO DEDICATED STEP COUPLING

Materials of Construction - See Table 5 of Technical Manual

GRIPPER COUPLING - CG

Product Features

KLAMFLEX Gripper Couplings are designed to resist end pull out on PE and PVC pipes, it is the fastening action of the Gripper Rings that secures the Coupling onto the pipe resisting end pull out.

KLAMFLEX Gripper Couplings are manufactured from Ductile Iron, Gasket material is EPDM, Gripper Ring material is Brass, and coating is Fusion Bonded Epoxy.

NUTS & BOLTS

Galvanised low carbon steel bolts and nuts (Stainless Steel on request)

RUBBER & COATING

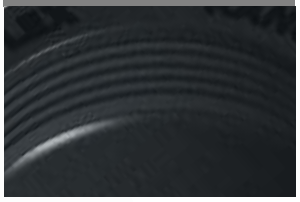

Non-toxic WRAS approved (EPDM rubber - Non-toxic and FBE to 300 micron coating)

BRASS GRIPPER

Brass gripper ring to ensure pull out resistance.

BODY & END RING

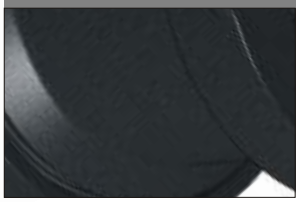

WRAS approved FBE Coating to 300 micron. Ductile iron

Gripper Coupling - CG

DN50 to DN300 (PN16)

Specifications

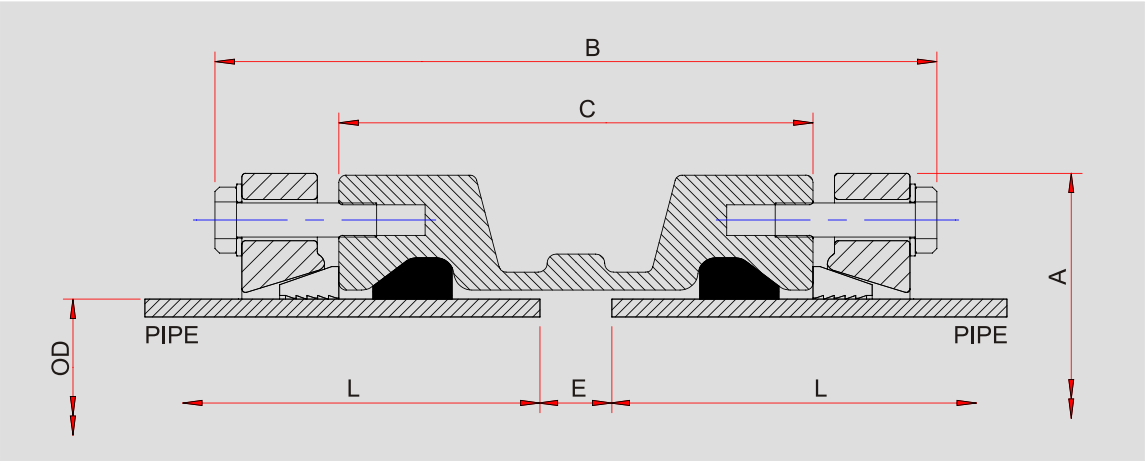

DN (mm)	Pipe OD Range (mm)	Approx. Mass (kg)
50	63	3
80	90	5
100	110	7
150	160	10
200	200	18
250	250	32
300	315	48

Dimensions

NOMINAL BORE	DN	50	80	100	150	200	250	300
Pipe Dia.	OD	63	90	110	160	200	250	315
End Ring Dia.	A	128	158	180	234	276	330	396
Coupling Length	B	180	200	200	230	270	330	390
Sleeve Width	C	128	128	132	170	210	240	300
Setting Gap	E	20	20	20	20	20	20	20
Min. Pipe Prep. Length	L	100	100	100	100	100	100	100
Bolting		8-M10x40	8-M10x40	8-M10x40	8-M10x40	8-M10x40	12-M10x40	12-M10x40

Materials of Construction - See Table 5 of Technical Manual

DEDICATED COUPLING - CD

Product Features

Manufactured to AWWA C219 under quality management systems accredited to ISO 9001:2008, the KLAMFLEX Dedicated Couplings join pipes of the same outside diameter. Couplings up to 324mm OD are delivered pre-assembled. Larger sizes are delivered ready for site assembly on the pipe. KLAMFLEX Dedicated Couplings can be manufactured to suit both metric and imperial dimensions for Steel, uPVC, Ductile Iron, G.R.P., Fibre Cement, Stainless Steel, Aluminium Alloys and virtually all other rigid pipe materials. KLAMFLEX Dedicated Couplings can be manufactured with double sleeves to prevent end pull out on HDPE and GRP pipes. The sizes shown in the schedules of dimensions are for guide purposes. KLAMFLEX'S manufacturing methods enable us to supply any size, including non-standard sizes.

KLAMFLEX Dedicated Couplings are pressure rated to the appropriate pipe standards. Working pressure is generally two-thirds of maximum test pressure shown in the schedules of dimensions. These pressures apply to a buried line with adequate thrust blocks or to pipelines above ground anchored at ends and at all changes of direction also secured against side thrusts at each joint. KLAMFLEX Couplings, though capable of accommodating reasonable expansion and contraction, do not mechanically prevent separation of pipe ends subject to end thrust, and this must be prevented by other means. To prevent separation of pipe ends, harness assemblies consisting of lugs for welding to adjacent pipes, and connecting tie rods can be supplied. Pipes must be anchored against end load, particularly when the pipeline is laid above ground. A buried pipeline normally needs anchoring only at abrupt changes in direction and at junctions or stop ends. KLAMFLEX Gaskets and Epoxy coatings are certified non-toxic for potable water in accordance with BS 6920 (WRAS approved).

NUTS & BOLTS

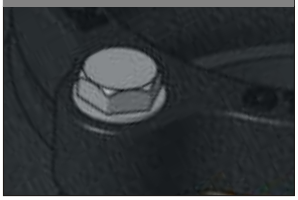

Galvanised low carbon steel bolts and nuts (Stainless Steel on request)

RUBBER & COATING

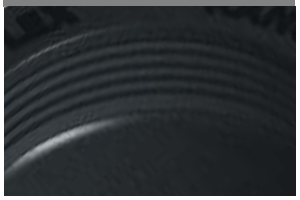

Non-toxic WRAS approved (EPDM rubber - Non-toxic and FBE to 300 micron coating)

SLEEVE

Manufactured to specific Od's.
50 - 125 Ductile iron
150 > Rolled Steel

END RING

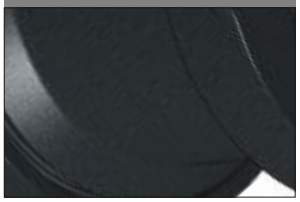

50 - 300 Ductile Iron
or
350 > Rolled Steel

Dedicated Coupling - CD

DN50 to DN2400 (PN10,16)

Dimensions

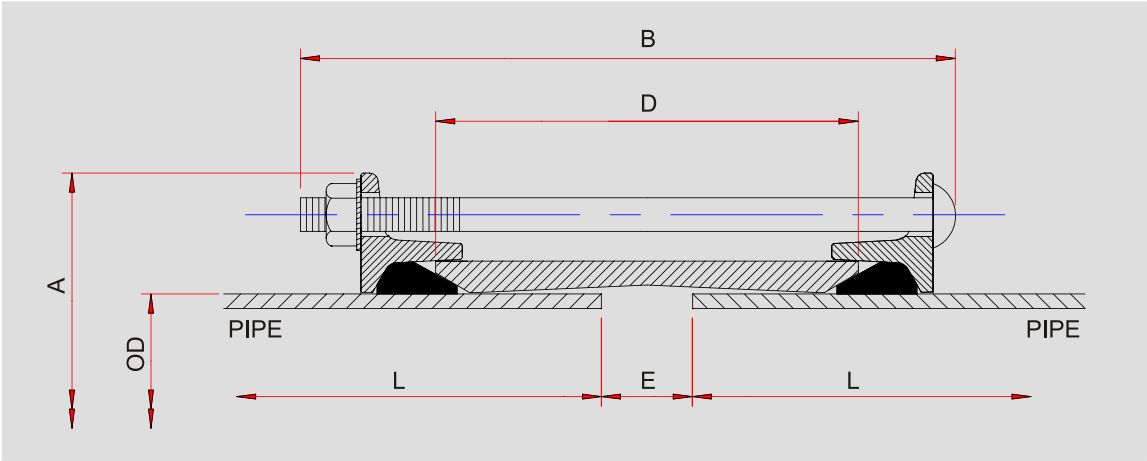

STEEL PIPES: ISO 2531:1991 BS 4772:1988

Nominal Bore (mm)	Pipe OD (mm)	Tolerance on Pipe OD for Prepared End (mm)	(mm)	Minimum Pipe End Prepared Length L (mm)	OD of Endrings A (mm)	Coupling Length B (mm)	Sleeve Width D (mm)	Setting Gap E (mm)	Standard Test Pressure at: 10 bar working pressure	16 bar working pressure	Approx. Mass (kg)
50	60.3	+0.8	-0.8	100	134	178	83	14	15	24	2.2
65	76.1	+0.8	-0.8	100	150	178	102	19	15	24	2.7
80	88.9	+0.8	-0.8	100	158	178	102	19	15	24	3.3
100	114.3	+0.8	-0.8	100	174	178	102	19	15	24	4.0
125	139.7	+1.6	-0.8	100	220	178	102	19	15	24	6.1
150	165.1	+1.6	-0.8	100	246	178	102	19	15	24	5.4
150	168.3	+1.6	-0.8	100	246	178	102	19	15	24	5.4
200	219.1	+1.6	-0.8	100	308	178	102	19	15	24	7.9
225	244.5	+1.6	-0.8	100	338	178	102	19	15	24	10.6
250	267.0	+1.6	-0.8	100	360	178	102	19	15	24	11.4
250	273.0	+1.6	-0.8	100	364	178	102	19	15	24	10.6
300	323.9	+1.6	-0.8	100	414	178	102	38	15	24	11.6
350	355.6	+1.6	-1.6	150	458	262	178	38	15	24	28.0
400	406.4	+1.6	-1.6	150	509	262	178	38	15	24	31.3
450	457.0	+1.6	-1.6	150	559	262	178	38	15	24	35.5
500	508.0	+1.6	-1.6	150	610	262	178	38	15	24	39.6
550	559.0	+1.6	-1.6	150	661	262	178	38	15	24	42.9
600	609.6	+1.6	-1.6	150	712	262	178	38	15	24	46.3
650	660.0	+1.6	-1.6	150	762	262	178	38	15	24	49.4
700	711.2	+1.6	-1.6	150	814	262	178	38	15	24	53.7
750	762.0	+1.6	-1.6	150	864	262	178	38	15	24	58.0
800	812.8	+1.6	-1.6	150	915	262	178	38	15	24	61.3
850	864.0	+1.6	-1.6	150	966	262	178	38	15	24	65.4
900	914.4	+1.6	-1.6	150	1017	262	178	38	15	24	68.6
950	965.0	+1.6	-1.6	150	1067	262	178	38	15	24	72.9

NOTE: DN 50 to DN 1600 - PN 10 and PN 16
DN 1800 to DN 2400 - PN 10

Materials of Construction - See Table 5 of Technical Manual

Dedicated Coupling - CD

DN50 to DN2400 (PN10,16)

Dimensions

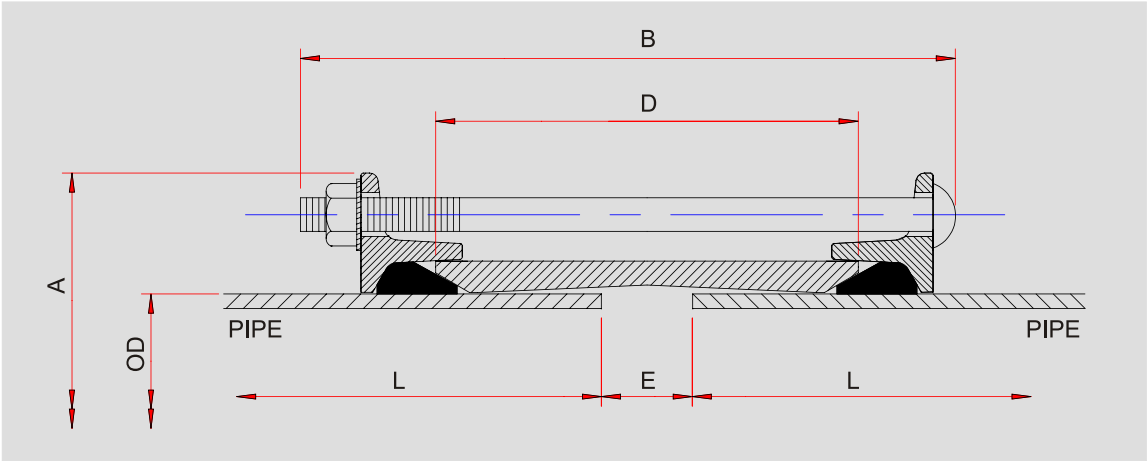

STEEL PIPES: ISO 2531:1991 BS 4772:1988

Nominal Bore (mm)	Pipe OD (mm)	Tolerance on Pipe OD for Prepared End (mm)	(mm)	Minimum Pipe End Prepared Length L (mm)	OD of Endrings A (mm)	Coupling Length B (mm)	Sleeve Width D (mm)	Setting Gap E (mm)	Standard Test Pressure at: 10 bar working pressure	16 bar working pressure	Approx. Mass (kg)
1000	1016.0	+1.6	-1.6	150	1118	262	178	38	15	24	76.0
1050	1067.0	+1.6	-1.6	150	1169	262	178	38	15	24	79.4
1100	1118.0	+1.6	-1.6	150	1220	262	178	38	15	24	83.6
1200	1219.0	+1.6	-1.6	150	1335	262	178	38	15	24	121.8
1200	1235.0	+1.6	-1.6	150	1351	262	178	38	15	24	123.2
1400	1420.0	+1.6	-3.0	150	1536	262	178	38	15	24	140.4
1400	1422.0	+1.6	-3.0	150	1538	262	178	38	15	24	140.7
1500	1520.0	+1.6	-3.0	150	1636	262	178	38	15	24	150.2
1600	1620.0	+3.0	-3.0	150	1736	262	178	38	15	24	160.0
1600	1626.0	+3.0	-3.0	150	1742	262	178	38	15	24	160.6
1800	1820.0	+3.0	-3.0	150	1936	262/450	178/356	57	15		TBA
1800	1829.0	+3.0	-3.0	150	1945	262/450	178/356	57	15		TBA
2000	2032.0	+3.0	-3.0	150/300	2146	262/450	178/356	57	15		TBA
2200	2232.0	+3.0	-3.0	150/300	2346	262/450	178/356	57	15		
2400	2432.0	+3.0	-3.0	150/300	2546	262/450	178/356	57	15		

NOTE: DN 50 to DN 1600 - PN 10 and PN 16
DN 1800 to DN 2400 - PN 10

Materials of Construction - See Table 5 of Technical Manual

Dedicated Coupling - CD

DN50 TO DN1000 (PN25,40)

Dimensions

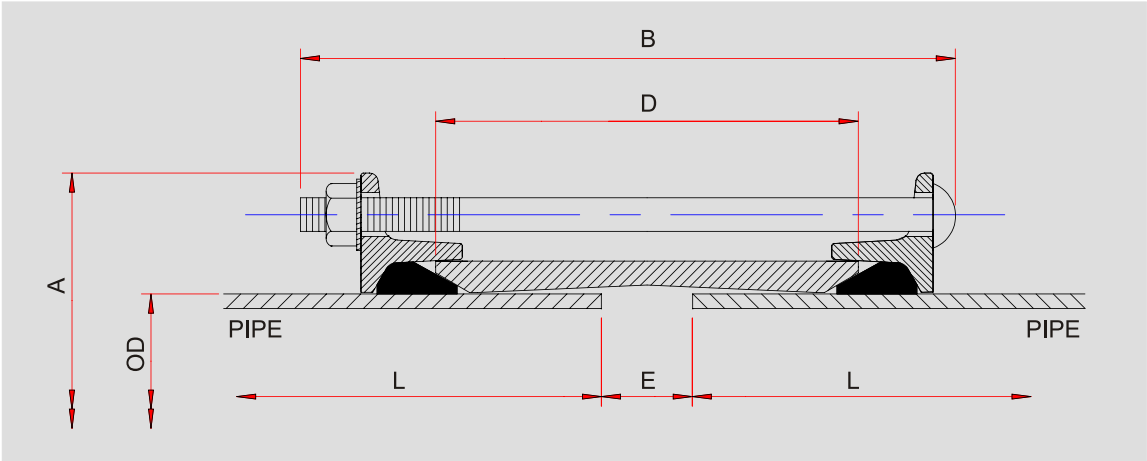

STEEL PIPES: ISO 2531:1991 BS 4772:1988

Nominal Bore (mm)	Pipe OD (mm)	Tolerance on Pipe OD for Prepared End (mm)	(mm)	Minimum Pipe End Prepared Length L (mm)	OD of Endrings A (mm)	Coupling Length B (mm)	Sleeve Width D (mm)	Setting Gap E (mm)	Standard Test Pressure at: 25 bar working pressure	40 bar working pressure	Approx. Mass (kg)
50	60.3	+0.8	-0.8	100	134	178	83	14	37.5	60	2.2
65	76.1	+0.8	-0.8	100	150	178	102	19	37.5	60	2.7
80	88.9	+0.8	-0.8	100	158	178	102	19	37.5	60	3.3
100	114.3	+0.8	-0.8	100	174	178	102	19	37.5	60	4.0
125	139.7	+1.6	-0.8	100	220	178	102	19	37.5	60	6.1
150	165.1	+1.6	-0.8	100	246	178	102	19	37.5	60	5.4
150	168.3	+1.6	-0.8	100	246	178	102	19	37.5	60	5.4
200	219.1	+1.6	-0.8	100	308	178	102	19	37.5	60	7.9
225	244.5	+1.6	-0.8	100	338	178	102	19	37.5	60	10.6
250	267.0	+1.6	-0.8	100	360	178	102	19	37.5	60	11.4
250	273.0	+1.6	-0.8	100	364	178	102	19	37.5	60	10.6
300	323.9	+1.6	-0.8	100	426	178	102	19	37.5	60	11.6
350	355.6	+1.6	-1.6	150	458	262	178	38	37.5	60	28.0
400	406.4	+1.6	-1.6	150	509	262	178	38	37.5	60	31.3
450	457	+1.6	-1.6	150	559	262	178	38	37.5	60	35.5
500	508	+1.6	-1.6	150	624	262	178	38	37.5	60	39.6
550	559	+1.6	-1.6	150	675	262	178	38	37.5	60	42.9
600	609.6	+1.6	-1.6	150	726	262	178	38	37.5	60	46.3
650	660.0	+1.6	-1.6	150	776	262	178	38	37.5		49.4
700	711.2	+1.6	-1.6	150	814	262	178	38	37.5		53.7
750	762.0	+1.6	-1.6	150	864	262	178	38	37.5		58.0
800	812.8	+1.6	-1.6	150	929	262	178	38	37.5		61.3
850	864.0	+1.6	-1.6	150	980	262	178	38	37.5		65.4
900	914.4	+1.6	-1.6	150	1031	262	178	38	37.5		68.6
950	965.0	+1.6	-1.6	150	1081	262	178	38	37.5		72.9
1000	1016.0	+1.6	-1.6	150	1132	262	178	38	37.5		76.0

NOTE: DN 50 to DN 600 - PN 25 and PN 40
DN 650 to DN 1000 - PN 25

Materials of Construction - See Table 5 of Technical Manual

Dedicated Coupling - CD

DN80 to DN2400 (PN10,16)

Dimensions

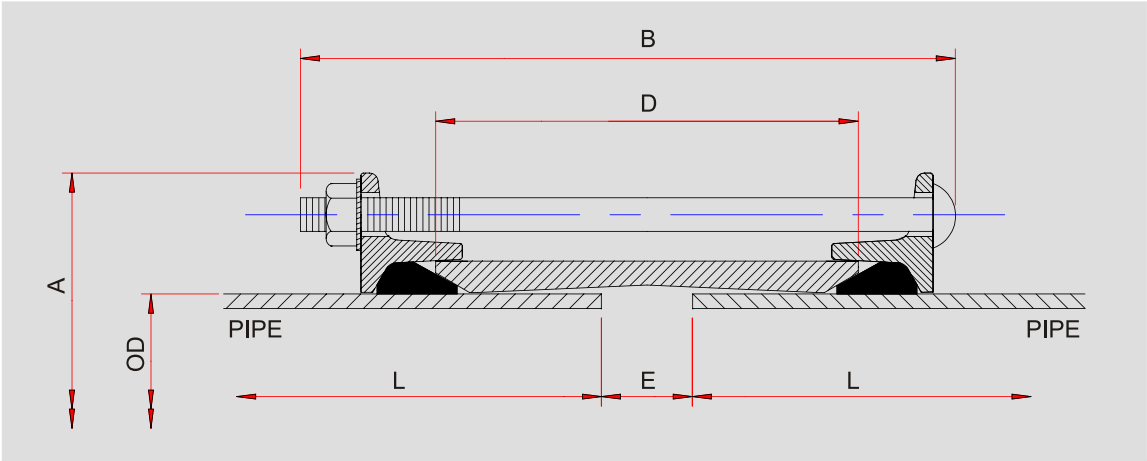

Ductile Iron Pipe ISO 2531 BS 4772

Nominal Bore (mm)	Pipe OD (mm)	Tolerance on Pipe OD for Prepared End (mm)	(mm)	Minimum Pipe End Prepared Length L (mm)	OD of Endrings A (mm)	Coupling Length B (mm)	Sleeve Width D (mm)	Setting Gap E (mm)	Standard Test Pressure at: 10 bar working pressure	16 bar working pressure	Approx. Mass (kg)
80	98	+1.0	-3.0	100	158	178	102	19	15	24	3.6
100	118	+1.0	-3.0	100	200	178	102	19	15	24	4.4
125	141	+1.0	-3.0	100	220	178	102	19	15	24	6.1
150	170	+1.0	-3.0	100	260	178	102	19	15	24	6.0
200	222	+1.0	-3.5	100	308	178	102	19	15	24	7.9
250	274	+1.0	-3.5	100	364	178	102	19	15	24	10.6
300	326	+1.0	-3.5	100	414	178	102	38	15	24	11.7
350	378	+1.0	-3.5	150	480	262	178	38	15	24	29.4
400	429	+1.0	-4.0	150	531	262	178	38	15	24	33.7
450	480	+1.0	-4.0	150	582	262	178	38	15	24	37.0
500	532	+1.0	-4.0	150	634	262	178	38	15	24	41.3
600	635	+1.0	-4.5	150	737	262	178	38	15	24	47.9
700	738	+1.0	-4.5	150	840 (854)*	262	178	38	15	24	56.4
800	842	+1.0	-4.5	150	944 (958)*	262	178	38	15	24	64.0
900	945	+1.0	-5.0	150	1047 (1061)*	262	178	38	15	24	70.6
1000	1048	+1.0	-5.0	150	1150 (1164)*	262	178	38	15	24	78.3
1100	1152	+1.0	-6.0	150	1268 (1282)*	262	178	38	15	24	115.0
1200	1255	+1.0	-6.0	150	1371	262	178	38	15	24	124.9
1400	1468	+1.0	-6.0	150	1578	262	178	38	15	24	144.2
1600	1668	+1.0	-6.0	150	1784	262	178	38	15	24	164.3
1800	1875	+1.0	-6.0	150/ 300	1989	262/450	178/356	57	15		TBA
2000	2082	+1.0	-6.0	150/ 300	2196	262/450	178/356	57	15		TBA
2200	2288	+1.0	-6.0	150/ 300	2402	262/450	178/356	57	15		TBA
2400	2495	+1.0	-6.0	150/ 300	2609	262/450	178/356	57	15		TBA

NOTE: DN 80 to DN 1600 - PN 10 and PN 16
DN 1800 to DN 2400 - PN 10

Materials of Construction - See Table 5 of Technical Manual

Dedicated Coupling - CD

DN80 to DN1000 (PN25,40)

Dimensions

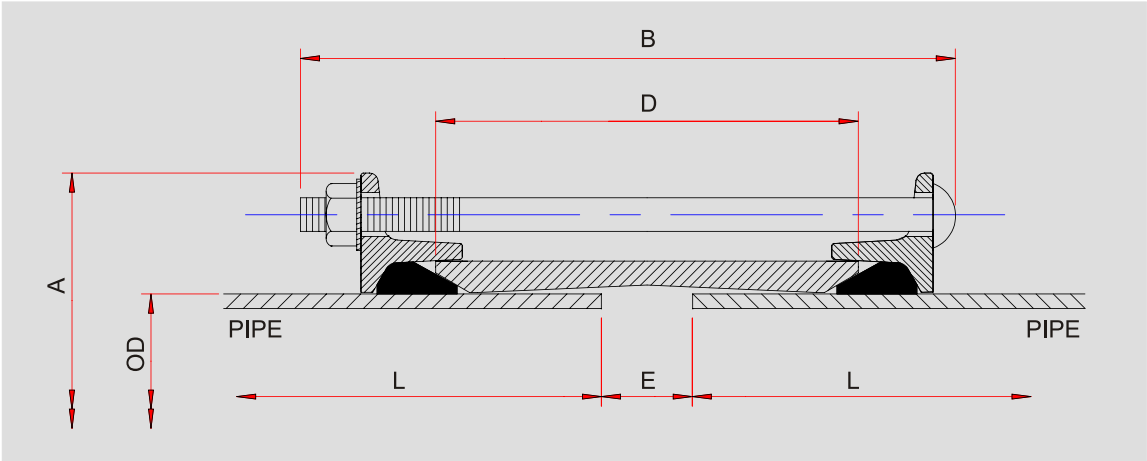

Ductile Iron Pipe ISO 2531 BS 4772

Nominal Bore (mm)	Pipe OD (mm)	Tolerance on Pipe OD for Prepared End (mm)	(mm)	Minimum Pipe End Prepared Length L (mm)	OD of Endrings A (mm)	Coupling Length B (mm)	Sleeve Width D (mm)	Setting Gap E (mm)	Standard Test Pressure at: 25 bar working pressure	40 bar working pressure	Approx. Mass (kg)
80	98	+1.0	-3.0	100	158	178	102	19	37.5	60	3.6
100	118	+1.0	-3.0	100	200	178	102	19	37.5	60	4.4
125	141	+1.0	-3.0	100	220	178	102	19	37.5	60	6.1
150	170	+1.0	-3.0	100	260	178	102	19	37.5	60	6.0
200	222	+1.0	-3.5	100	308	178	102	19	37.5	60	7.9
250	274	+1.0	-3.5	100	364	178	102	19	37.5	60	10.6
300	326	+1.0	-3.5	100	428	178	102	38	37.5	60	11.7
350	378	+1.0	-3.5	150	480	262	178	38	37.5	60	29.4
400	429	+1.0	-4.0	150	531	262	178	38	37.5	60	33.7
450	480	+1.0	-4.0	150	582	262	178	38	37.5	60	37.0
500	532	+1.0	-4.0	150	648	262	178	38	37.5	60	41.3
600	635	+1.0	-4.5	150	751	262	178	38	37.5	60	47.9
700	738	+1.0	-4.5	150	854	262	178	38	37.5		56.4
800	842	+1.0	-4.5	150	958	262	178	38	37.5		64.0
900	945	+1.0	-5.0	150	1061	262	178	38	37.5		70.6
1000	1048	+1.0	-5.0	150	1164	262	178	38	37.5		78.3

NOTE: DN 80 to DN 600 - PN 25 and PN 40
DN 700 to DN 1000 - PN 25

Materials of Construction - See Table 5 of Technical Manual

Centre Register

Anchored and Harnessed Couplings

Centre Register

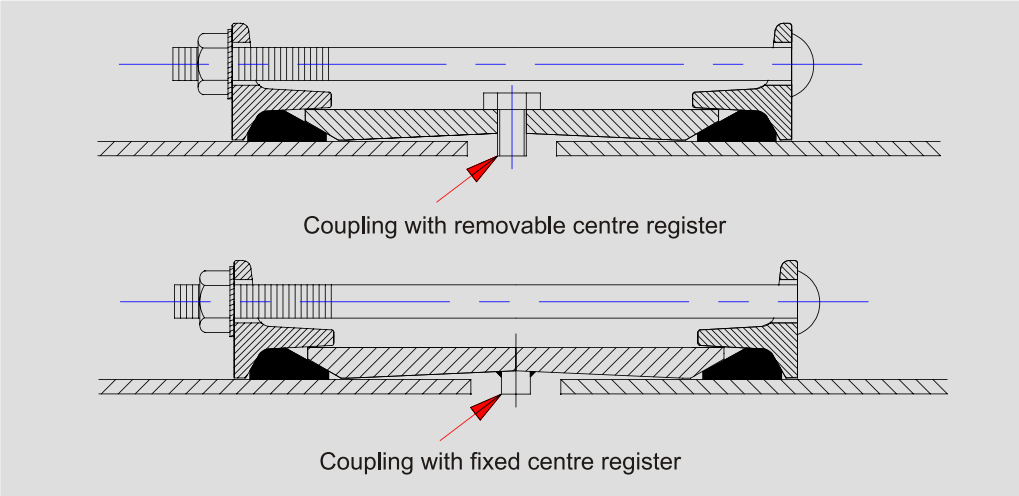

The centre sleeve can be supplied with or without internal centre register studs. The registers provide a locating stop to centre the coupling which facilitates the laying of long pipe runs. Centre registers also prevent the possibility of the coupling creeping at positions where there are continual axial movements.

KLAMFLEX Centre registers are of two types: **A** (from 350mm) removable, used where the coupling can be moved along the pipe to allow the pipe to be inspected, and **B** (all sizes) fixed, used where there is no need to remove couplings.

Anchored Coupling

With brackets welded to the centre sleeve, couplings can be bolted directly to the supporting structure. Brackets designed to withstand the thrust produced by maximum angularity and will support a 10m long pipe full of water (up to DN 1500mm)

We recommend the use of locating centre registers with anchored couplings to help resist pipe movement. On steep slopes, special consideration should be given to anchorage.

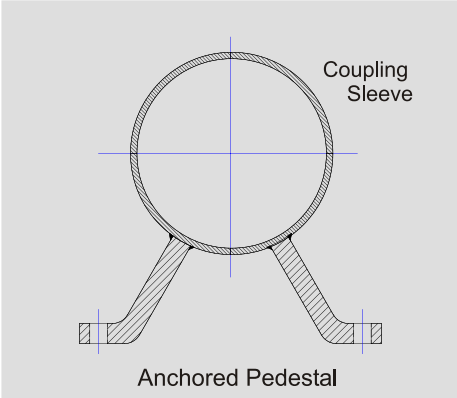

Harnessed Coupling

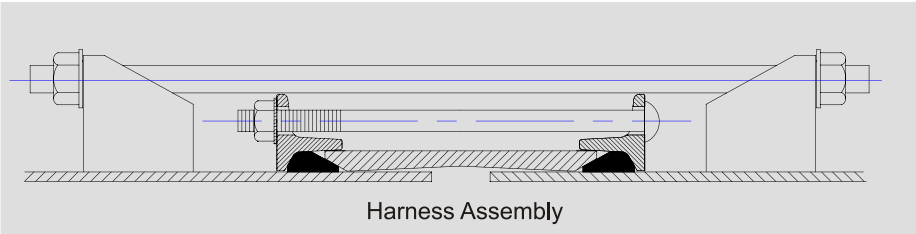

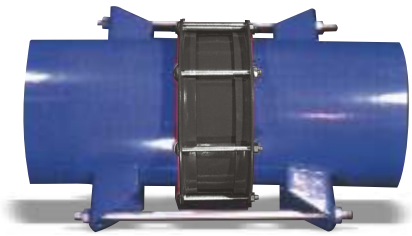

One method of preventing pipe separation is the use of a harness assembly, consisting of lugs for welding to steel pipes and restraining tie rods. Cast iron pipes can sometimes be harnessed through the use of additional flanges cast onto pipe ends.

DEDICATED STEP COUPLING - CS

Product Features

Where pipe ends of different outside diameters have to be connected, KLAMFLEX Dedicated Stepped Couplings can be provided. These normally cover the difference between the outside diameters of pipes of different materials of construction with a common nominal bore, or pipes of the same materials having different nominal bores.

It is advisable to mark the pipe a known distance from the end when fitting a KLAMFLEX Dedicated Stepped Coupling to enable inspection of movement. This will allow the inspector to ensure that no telescoping along the smaller diameter pipe has occurred.

When the KLAMFLEX Dedicated Stepped Coupling is used as a Coupling between two pipes with diameter differences exceeding 25mm it is essential to ensure that the Stepped Coupling cannot be forced along the smaller diameter pipe. Scheduled sizes will not normally require such precautions, but others may. Regular inspection of a pipe previously marked, is normally all that is required. Alternatively, where this cannot be arranged, a mechanical means should be employed.

Pressure rating for Stepped Couplings are equivalent to the rating specified in the Straight Coupling schedules, for the larger of the two OD's. In the case of ductile iron, AC and uPVC pipes, the pressure rating will match the pipe rating.

KLAMFLEX Dedicated Stepped Couplings can be manufactured with full sleeves to prevent end pull-out on PE, HDPE and GRP pipes.

KLAMFLEX Dedicated Step Couplings are NOT DESIGNED TO RESIST END LOAD due to pressure forces and therefore such forces must normally be resisted by other means.

NUTS & BOLTS

Galvanised low carbon steel bolts and nuts (Stainless Steel on request)
Studs 304 Stainless Steel
(316 Stainless Steel on request)

RUBBER & COATING

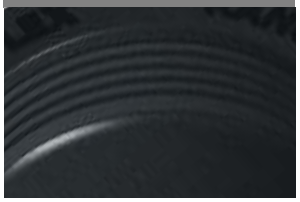

Non-toxic WRAS approved EPDM rubber - Non-toxic

SLEEVE

Made to specific OD's.
50-125NB Ductile Iron
150NB Rolled Steel

END RING

50-300 Ductile Iron
Or
350> Rolled Steel

Dedicated Step Coupling - CS

DN50 to DN2400

Dimensions

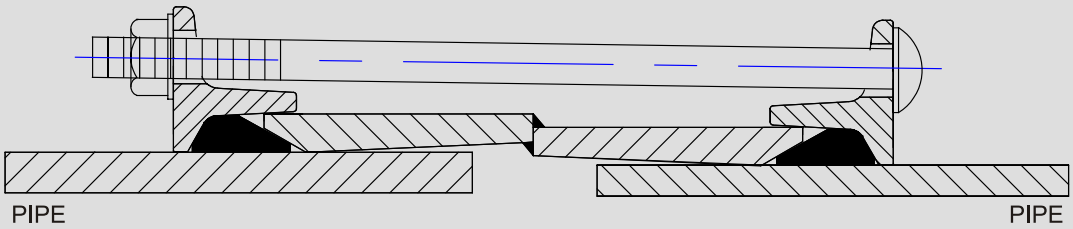

Stepped Coupling

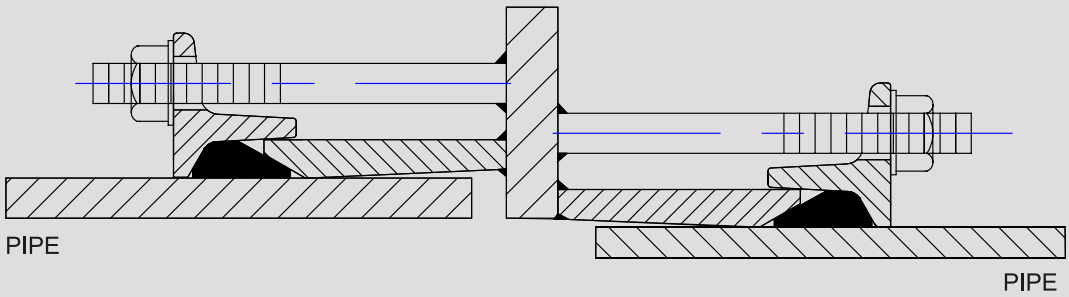

Stepped Coupling with Profile Plate

Materials of Construction - See Table 5 of Technical Manual

SHOULDERED COUPLINGS - SH

Product Features

KLAMFLEX general purpose Shouldered Couplings are manufactured in accordance with SANS 815 and can be used on shouldered end pipes for various applications.

DN (mm)	Pipe OD (mm)	Working Pressure (Mpa)	Bolt Size (mm)	OD (mm)	ID (mm)	L (mm)	H (mm)	Approx. Mass (kg)
50	60.3	4.0	M10x55	97	61.0	132	48	0.90
80	88.9	4.0	M12x85	127	90.6	170	48	1.30
100	114.3	3.5	M12x85	156	115.6	206	52	1.80
150	165.1	3.5	M16x100	212	167.0	273	52	2.50
200	219.1	3.0	M20x110	280	221.0	346	60	5.10
250	273.0	2.5	M22x130	342	275.0	416	64	5.30
300	323.9	2.5	M22X130	396	326.0	474	64	5.80

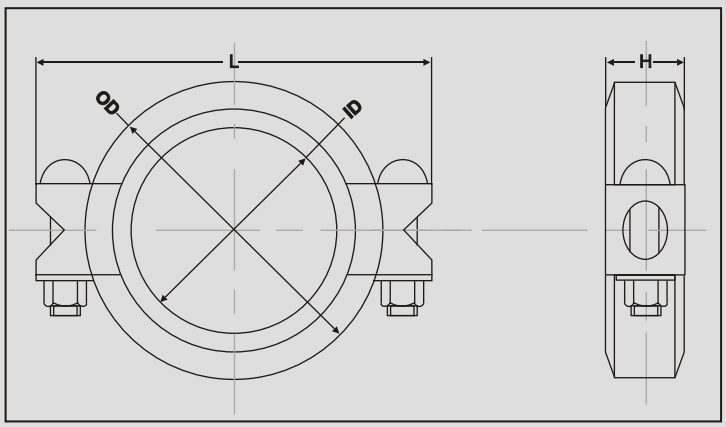

Materials of Construction - See Table 5 of Technical Manual

RANGER FLANGE ADAPTORS - RF

Product Features

KLAMFLEX Ranger Flange Adaptors are designed to join pipes of various outside diameters with flanged equipment of various drilling tables. Because of the wide range tolerance on OD a single KLAMFLEX Ranger Flange Adaptor can connect steel, ductile iron, UPVC, cast iron, asbestos cement and other rigid pipe materials to the mating flange. This eliminates on site guesswork and stock range holdings are optimised.

Moulded, circumferentially ribbed or specially profiled gaskets, generally in EPDM or NBR materials, provide for smooth installation by minimising contact friction. KLAMFLEX Ranger Flange Adaptor Gaskets are designed to provide a leak tight seal across the O.D range per nominal size and still allow for thermal expansion and contraction of the pipe up to 5mm per gasket, facilitated through gasket deformation.

To facilitate installation and avoid possible creep under rising load, it is strongly recommended that the KLAMFLEX Ranger Flange Adaptor Rubber Sealing Gaskets are well lubricated with a suitable non-toxic soap solution before the introduction of the pipe. This practice should obviate the need for re-tightening the fasteners after pressure testing, and further facilitate the seating of the joint components. KLAMFLEX Ranger Flange Adaptors can be manufactured with full sleeves to prevent end pull-out on PE, HDPE and GRP pipes.

NUTS & BOLTS

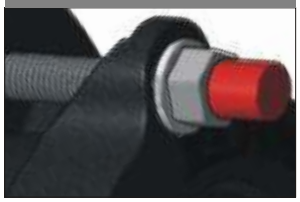

Galvanised low carbon steel bolts and nuts (Stainless Steel on request)

RUBBER & COATING

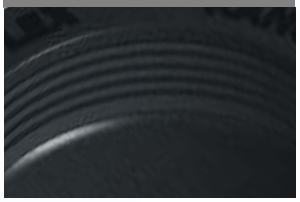

Non-toxic WRAS approved (EPDM rubber - Non-toxic and FBE to 300 micron coating)

FLANGE & DRILLING

Multi drilling to accomodate a large range of Flanges. SANS, BS EN, ASME, AWWA and others.

BODY & END RING

Ductile Iron

Ranger Flange Adaptors - RF

DN50 to DN600

Specifications

DN (mm)	Pipe OD (mm)	Approx. Mass (kg)	Flange Drilling Compatibility
50/2	59-72	3	BS 10, Table D, E & F, ANSI 150, BS4504 10/3, 16/3, BS EN1092 10/3, 16/3
65/2.5	72-85	4	BS 10, Table F, BS4504 10/3, 16/3, BS EN1092 10/3, 16/3
80/3	88-103	5	BS 10, Table D, E & F, ANSI 150, BS4504 10/3, 16/3, BS EN1092 10/3, 16/3
100/4	109-128	5	BS 10, Table D, E & F, ANSI 150, BS4504 10/3, 16/3, BS EN1092 10/3, 16/3
125/5	138-153	7	BS 10, Table D, E & F, ANSI 150, BS4504 10/3, 16/3, BS EN1092 10/3, 16/3
150/6	159-182	8	BS 10, Table D, E, ANSI 150, BS4504 10/3, 16/3, BS EN1092 10/3, 16/3
175/7	192-210	9	BS4504 10/3, 16/3, BS EN1092 10/3, 16/3
200/8	218-235	10	BS 10, Table D, E, ANSI 150, BS4504 10/3, 16/3, BS EN1092 10/3, 16/3
250/10	242-262	14	BS4504 16/3, BS EN1092 16/3, SABS1123: 600/3, 1000/3, 1600/3
250/10	250-267 272-289	16 15	BS 10, Table E, BS4504 10/3, 16/3, BS EN1092 10/3, 16/3
300/12	315-332	22	BS 10, Table D, E, BS4504 10/3, 16/3, BS EN1092 10/3, 16/3, SABS1123: 600/3, 1000/3, 1600/3
300/12	322-340	19	BS 10, Table D, E, ANSI 150, BS4504 10/3, 16/3, BS EN1092 10/3, 16/3, SABS1123: 600/3, 1000/3, 1600/3
350/14	351-378	29	BS4504 10/3, 16/3, BS EN1092 10/3, 16/3, SABS1123: 600/3, 1000/3, 1600/3
350/14	374-391	25	BS4504 10/3, 16/3, BS EN1092 10/3, 16/3, SABS1123: 600/3, 1000/3, 1600/3
400/16	417-437	29	BS4504 10/3, 16/3, BS EN1092 10/3, 16/3, SABS1123: 600/3, 1000/3, 1600/3
400/16	425-442	32	BS4504 10/3, 16/3, BS EN1092 10/3, 16/3, SABS1123: 600/3, 1000/3, 1600/3
450/18	480-500	33	BS4504 10/3, 16/3, BS EN1092 10/3, 16/3, SABS1123: 600/3, 1000/3, 1600/3
500/20	526-546	41	ANSI 150, BS4504 10/3, 16/3, BS EN1092 10/3, 16/3, SABS1123: 600/3, 1000/3, 1600/3
600/24	630-650	51	ANSI 150, BS4504 10/3, 16/3, BS EN1092 10/3, 16/3, SABS1123: 600/3, 1000/3, 1600/3

MAX WORKING PRESSURE: 16 BAR
SETTING GAP: 14 - 32 mm
TOLERANCE ON ANGULAR DEFLECTION: 3 DEGREES
EXPANSION & CONTRACTION RANGE: 0-5 mm
RECOMMENDED BOLT TORQUE: 60 - 80 Nm
FOR COUPLINGS OF 25 & 40 BAR WORKING PRESSURE PLEASE REFER TO DEDICATED FLANGE ADAPTORS

Materials of Construction - See Table 5 of Technical Manual

Ranger Flange Adaptor - RF

DN50 to DN600

Dimensions

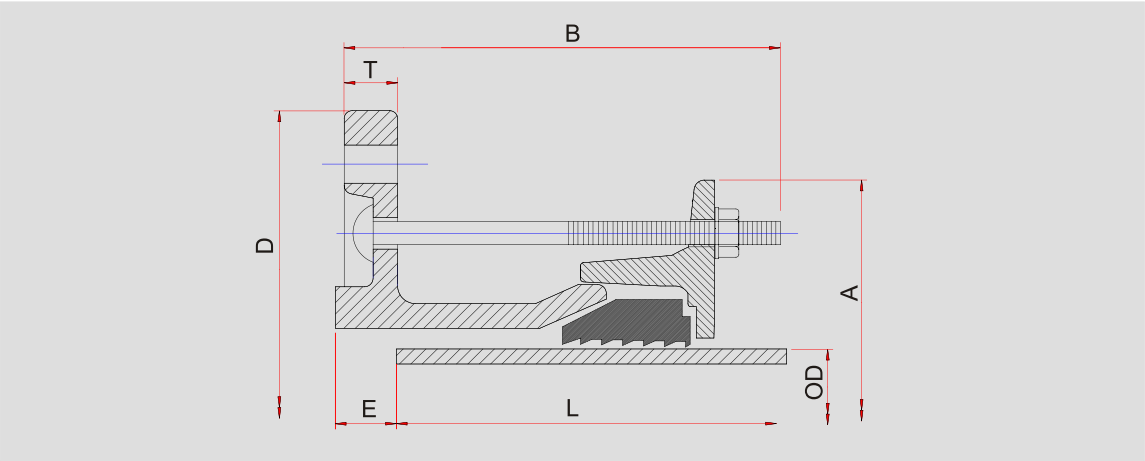

NOMINAL BORE	DN		50	65	80	100	125	150	175	200
Pipe Dia. Range	OD		59 - 72	72 - 85	88 - 103	109 - 128	138 - 153	159 - 182	192 - 210	218 - 235
End Ring Dia.	A		165	175	195	230	250	290	305	340
Adaptor Length	B		130	130	135	135	135	135	135	135
Flange Dia.	D		165	185	225	225	280	290	340	340
Setting Gap	E		19	19	19	19	19	19	19	19
Flange Thickness	T		18	18	18	18	20	20	20	20
Min. Pipe Prep. Length	L		100	100	100	100	100	100	100	100
Bolting			2-M12x120	2-M12x120	4-M12x120	4-M12x120	4-M12x120	4-M12x120	4-M12x120	4-M12x120

NOMINAL BORE	DN		225	250	250	300	300	300	350	400
Pipe Dia. Range	OD		242 - 262	250 - 267	272 - 289	315 - 332	322 - 340	351 - 378	374 - 391	471 - 437
End Ring Dia.	A		360	400	410	450	450	500	510	530
Adaptor Length	B		135	140	140	145	145	170	150	170
Flange Dia.	D		410	400	405	460	460	520	520	580
Setting Gap	E		19	19	19	19	19	19	19	19
Flange Thickness	T		20	20	20	24	24	24	27	30
Min. Pipe Prep. Length	L		100	100	100	150	150	150	150	150
Bolting			6-M12x120	4-M12x120	4-M12x120	4-M12x120	4-M12x140	6-M12x160	8-M12x140	8-M12x160

NOMINAL BORE	DN		400	450	500	600
Pipe Dia. Range	OD		425 - 442	480 - 500	526 - 546	630 - 650
End Ring Dia.	A		555	630	670	780
Adaptor Length	B		170	170	170	170
Flange Dia.	D		580	650	730	840
Setting Gap	E		19	19	19	19
Flange Thickness	T		30	30	30	30
Min. Pipe Prep. Length	L		150	150	150	150
Bolting			8-M12x160	8-M12x160	10-M12x160	10-M12x160

Materials of Construction - See Table 5 of Technical Manual

GRIPPER FLANGE ADAPTOR - FB

Product Features

KLAMFLEX Gripper Flange Adaptors are designed to resist end pull out on PE and PVC pipes, it is the fastening action of the Gripper Rings that secures the Flange Adaptor onto the pipe resisting end pull out.

KLAMFLEX Gripper Flange Adaptors are manufactured from Ductile Iron, Gasket material is EPDM, Gripper Ring material is Brass, and coating is Fusion Bonded Epoxy.

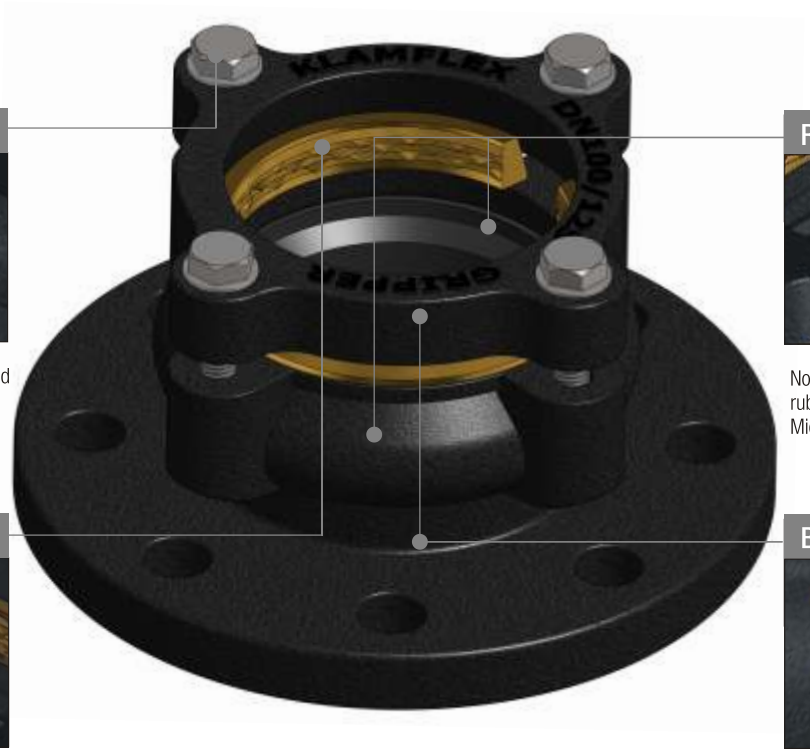

NUTS & BOLTS

Galvanised low carbon steel bolts and nuts (Stainless Steel on request)

RUBBER & COATING

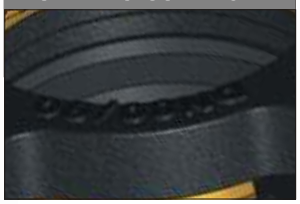

Non-toxic WRAS approved (EPDM rubber - Non-toxic and FBE to 300 Micron coating)

BRASS GRIPPER

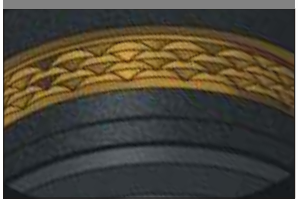

Brass gripper ring to ensure pull out resistance.

BODY & END RING

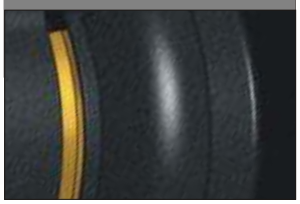

WRAS approved FBE Coating to 300 micron. Ductile Iron

Gripper Flange Adaptor - FB

DN50 to DN300

Specifications

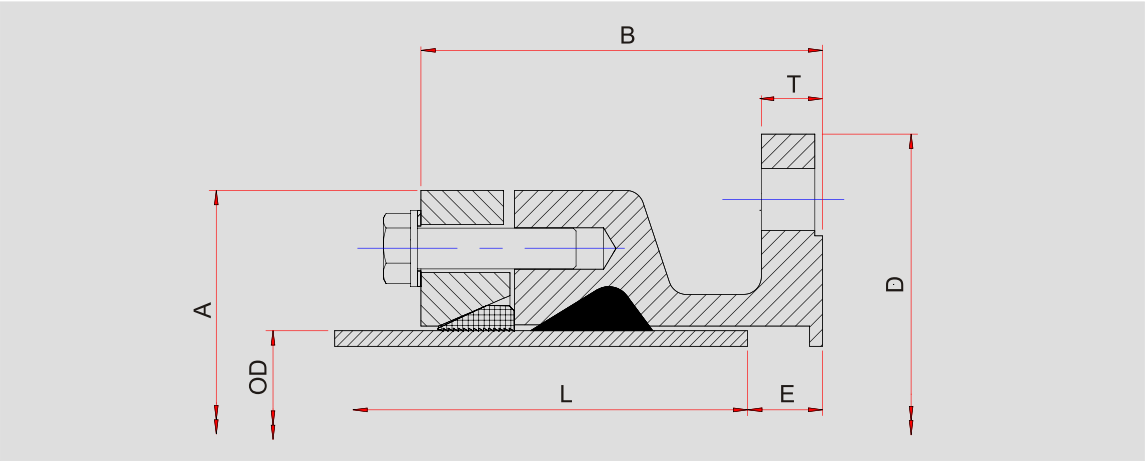

DN (mm)	Pipe OD (mm)	Pressure Rating	Approx. Mass (kg)
50	63	PN10/16	4
80	90	PN10/16	5
100	110	PN10/16	6
150	160	PN10/16	13
150	180	PN10/16	13
200	200	PN16	16
200	225	PN16	18
250	250	PN16	25
250	280	PN16	28
300	315	PN16	38

Dimensions

NOMINAL BORE	DN		50	65	80	100	100	150
Pipe Dia. Range	OD		63	75	90	110	125	160
End Ring Dia.	A		130	142	160	180	195	235
Adaptor Length	B		100	100	100	100	105	120
Flange Dia.	D		165	185	200	220	220	285
Setting Gap	E		19	19	19	19	19	19
Flange Thickness	T		18	18	18	18	18	18
Min. Pipe Prep. Length	L		100	100	100	100	100	100
Bolting			2-M10x35	2-M10x35	4-M10x35	4-M10x35	4-M10x35	4-M10x35

NOMINAL BORE	DN		150	200	200	250	250	300
Pipe Dia. Range	OD		180	200	225	250	280	315
End Ring Dia.	A		255	275	300	325	360	395
Adaptor Length	B		120	135	135	160	160	195
Flange Dia.	D		285	340	340	400	400	455
Setting Gap	E		19	19	19	19	19	19
Flange Thickness	T		18	18	18	22	22	24
Min. Pipe Prep. Length	L		100	100	100	100	100	100
Bolting			4-M10x35	4-M10x40	4-M10x40	6-M10x40	6-M10x40	6-M10x50

Materials of Construction - See Table 5 of Technical Manual

DEDICATED FLANGE ADAPTORS - FA

Product Features

KLAMFLEX Dedicated Flange Adaptors are manufactured to join plain-ended pipe to flanged valves, fittings and pipes, obviating difficulties usually experienced with rigid connections.

KLAMFLEX Dedicated Flange Adaptors are supplied to suit the pressure rating of the flange. The overall pressure rating of the assembled adaptor will be equal to that of the lower rated component, either pipe of flange. KLAMFLEX VARIplus-DFA Restraint Flange Adaptors can also be supplied where end pull out is of concern.

When ordering KLAMFLEX Dedicated Flange Adaptors the following information is required to avoid the possibility of error in flange selections:

- Pipe outside diameter
- Nominal bore of the flanged fitting
- Table drilling with standard applicable

The thickness of KLAMFLEX Dedicated Flanges will not necessarily be the same as the mating flange due to the fact that the flange of the Flange Adaptor will not be subject to the full end or side thrust. Flanges and Flange Adaptors will not be subject to the full end or side thrust, most of which is absorbed by the flexibility in the rubber gaskets. Refer to column "T" below.

KLAMFLEX Dedicated Flange Adaptors can be manufactured with full sleeves to prevent end pull out on PE, HDPE and GRP pipes.

KLAMFLEX Dedicated Flange Adaptors are NOT DESIGNED TO RESIST END LOAD due to pressure forces and therefore such forces must normally be resisted by other means

NUTS & BOLTS

Galvanised low carbon steel bolts and nuts (Stainless Steel on request)
Studs 304 Stainless Steel
(316 Stainless Steel on request)

RUBBER & COATING

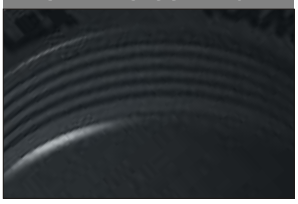

Non-toxic WRAS approved EPDM rubber - Non-toxic

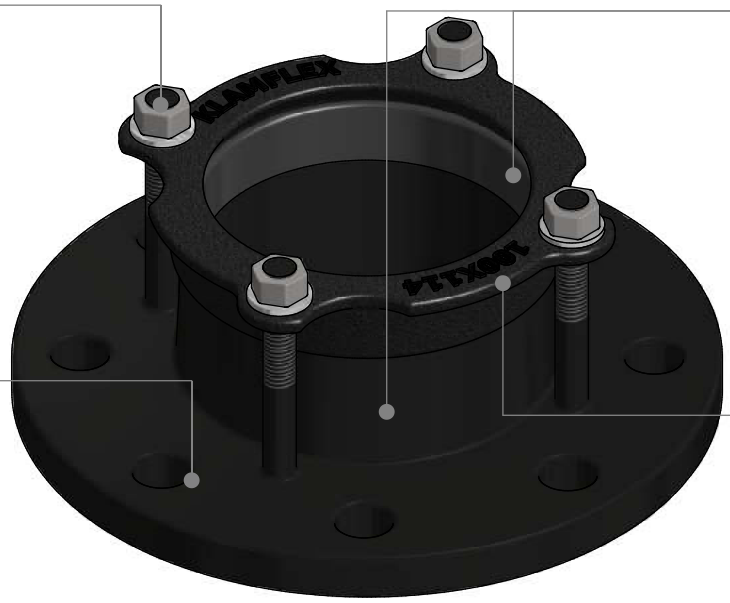

FLANGES

Flange drilling according to international standards: SANS, BS EN, ASME, AWWA and others.

BODY & END RINGS

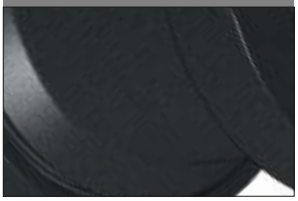

Ductile Iron or Steel

Dedicated Flange Adaptor - FA

DN50 to DN2400 PN10 (16)*

Dimensions

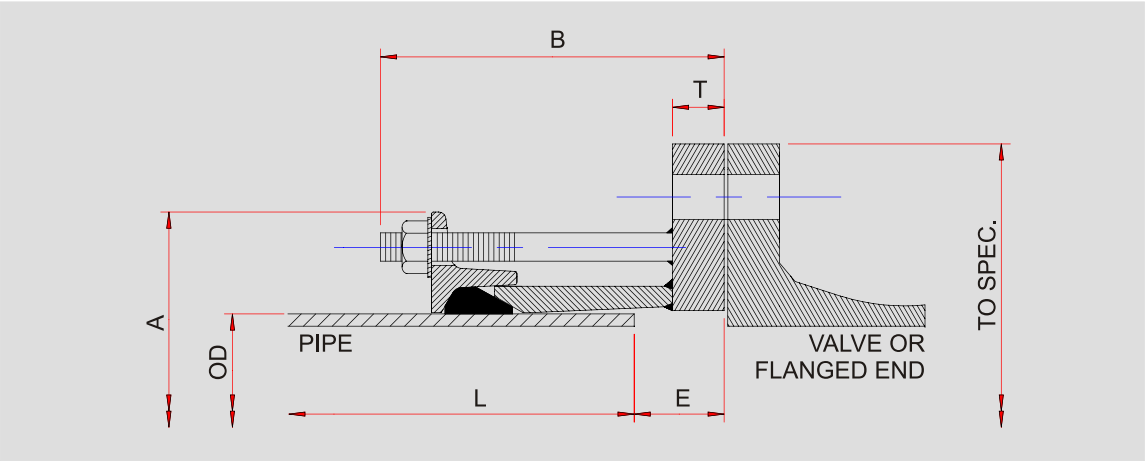

STEEL PIPES

Nominal Bore (mm)	Pipe OD (mm)	Tolerance on Pipe OD for Prepared End (mm)		Minimum Pipe End Prepared Length L (mm)	OD of Endrings A (mm)	Flange Adaptor Length B (mm)	Table Flange Thickness T (mm)	Setting Gap E (mm)	Approx. Mass (kg)
50	60.3	+0.8	-0.8	100	134	100	10	19	3
65	76.1	+0.8	-0.8	100	150	100	10	19	3
80	88.9	+0.8	-0.8	100	165	100	10	19	4
100	114.3	+0.8	-0.8	100	191	100	10	19	5
125	139.7	+1.6	-0.8	100	220	104	14	19	7
150	165.1	+1.6	-0.8	100	246	104	14	19	8
150	168.3	+1.6	-0.8	100	246	104	14	19	8
200	219.1	+1.6	-0.8	100	308	108	18	19	10
250	267.0	+1.6	-0.8	100	360	108	18	19	16
250	273.0	+1.6	-0.8	100	364	108	18	19	15
300	323.9	+1.6	-0.8	100	414	108	18	19	17
350	355.6	+1.6	-1.6	150	458	163	23	32	34
400	406.4	+1.6	-1.6	150	509	163	23	32	40
450	457.0	+1.6	-1.6	150	559	163	23	32	46
500	508.0	+1.6	-1.6	150	610	163	23	32	56
600	610.0	+1.6	-1.6	150	712	163	23	32	71
700	711.0	+1.6	-1.6	150	813	163	23	32	72
800	813.0	+1.6	-1.6	150	915	163	23	32	84
900	914.0	+1.6	-1.6	150	1016	163	23	32	90
1000	1016.0	+1.6	-1.6	150	1118	168	28	32	119
1200	1219.0	+1.6	-1.6	150	1335	170 (178)*	30 (38)*	32	198
1400	1420.0	+1.6	-3.0	150	1536	170 (178)*	30 (38)*	32	276
1600	1620.0	+3.0	-3.0	150	1736	178	50 (60)*	32	439
1800	1820.0	+3.0	-3.0	150	1936	178	60	32	494
2000	2020.0	+3.0	-3.0	150/ 300	2134	178	70	32	TBA
2000	2032.0	+3.0	-3.0	150/ 300	2146	178	70	32	TBA
2200	2232.0	+3.0	-3.0	150/ 300	2346	178	70	32	TBA
2400	2432.0	+3.0	-3.0	150/ 300	2546	178	80	32	TBA

NOTE: DN 50 to DN 1600 - PN 10 and PN16
DN 1800 to DN 2400 - PN 10

Materials of Construction - See Table 5 of Technical Manual

Dedicated Flange Adaptor - FA

DN50 to DN1000 PN25 (40)*

Dimensions

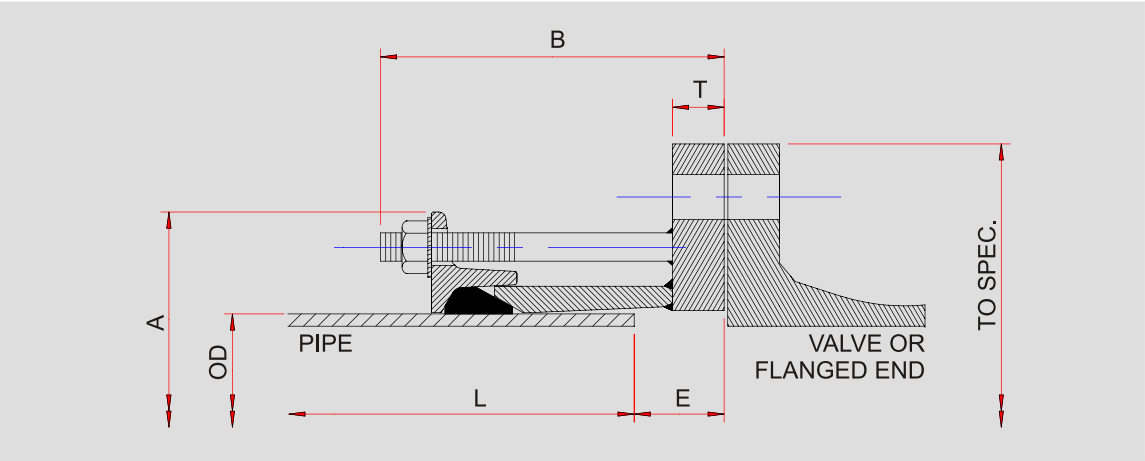

STEEL PIPES

Nominal Bore (mm)	Pipe OD (mm)	Tolerance on Pipe OD for Prepared End (mm)		Minimum Pipe End Prepared Length L (mm)	OD of Endrings A (mm)	Flange Adaptor Length B (mm)	Table Flange Thickness T (mm)	Setting Gap E (mm)	Approx. Mass (kg)
50	60.3	+0.8	-0.8	100	134	104	14	19	3
65	76.1	+0.8	-0.8	100	150	104	14	19	3
80	88.9	+0.8	-0.8	100	165	104	14	19	4
100	114.3	+0.8	-0.8	100	191	104	14	19	5
125	139.7	+1.6	-0.8	100	220	108	18	19	7
150	165.1	+1.6	-0.8	100	246	108	18	19	8
150	168.3	+1.6	-0.8	100	246	108	18	19	8
200	219.1	+1.6	-0.8	100	308	113	23	19	10
250	267.0	+1.6	-0.8	100	360	113	23	19	16
250	273.0	+1.6	-0.8	100	364	113	23	19	15
300	323.9	+1.6	-0.8	100	414	113 (118)*	23 (28)*	19	17
350	355.6	+1.6	-1.6	150	458	168	28	32	34
400	406.4	+1.6	-1.6	150	509	168	28	32	40
450	457.0	+1.6	-1.6	150	559	168	28	32	46
500	508.0	+1.6	-1.6	150	610	168 (170)*	28 (30)*	32	56
600	610.0	+1.6	-1.6	150	712	168 (178)*	28 (38)*	32	71
700	711.0	+1.6	-1.6	150	813	168	28	32	72
800	813.0	+1.6	-1.6	150	929	168	28	32	84
900	914.0	+1.6	-1.6	150	1031	168	28	32	90
1000	1016.0	+1.6	-1.6	150	1132	178	38	32	119

NOTE: DN 50 to DN 600 - PN 25 and PN 40
DN 700 to DN 1000 - PN 25

Materials of Construction - See Table 5 of Technical Manual

Dedicated Flange Adaptor - FA

DN 80 to DN2400 PN10 (16)*

Dimensions

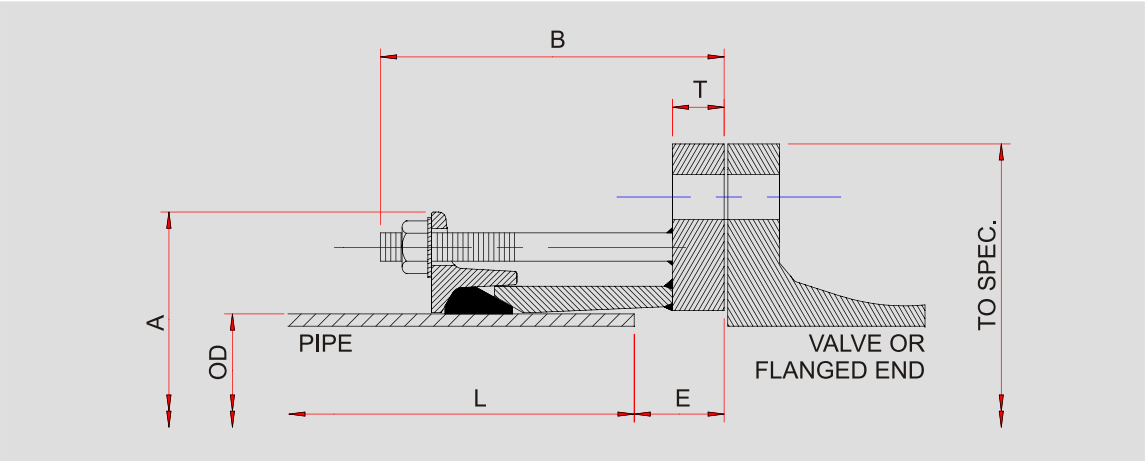

DUCTILE IRON PIPES

Nominal Bore (mm)	Pipe OD (mm)	Tolerance on Pipe OD for Prepared End (mm)		Minimum Pipe End Prepared Length L (mm)	OD of Endrings A (mm)	Flange Adaptor Length B (mm)	Table Flange Thickness T (mm)	Setting Gap E (mm)	Approx. Mass (kg)
80	98	+1.0	-3.0	100	165	100	10	19	4
100	118	+1.0	-3.0	100	200	100	10	19	5
125	144	+1.0	-3.0	100	220	104	14	19	7
150	170	+1.0	-3.0	100	260	104	14	19	8
200	222	+1.0	-3.5	100	308	108	18	19	10
250	274	+1.0	-3.5	100	364	108	18	19	15
300	326	+1.0	-3.5	100	414	108	18	19	17
350	378	+1.0	-3.5	150	480	163	23	32	32
400	429	+1.0	-4.0	150	531	163	23	32	38
450	480	+1.0	-4.0	150	582	163	23	32	43
500	532	+1.0	-4.0	150	634	163	23	32	53
600	635	+1.0	-4.5	150	737	163	23	32	67
700	738	+1.0	-4.5	150	840	163	23	32	67
800	842	+1.0	-4.5	150	944	163	23	32	78
900	945	+1.0	-5.0	150	1047	163	23	32	82
1000	1048	+1.0	-5.0	150	1150	168	28	32	109
1200	1255	+1.0	-6.0	150	1371	170 (178)*	30 (38)*	32	180
1400	1462	+1.0	-6.0	150	1578	170 (178)*	30 (38)*	32	244
1600	1668	+1.0	-6.0	150	1784	178	50 (60)*	32	383
1800	1875	+1.0	-6.0	150	1989	178	60	32	TBA
2000	2082	+1.0	-6.0	150/300	2196	178	70	32	TBA
2200	2288	+1.0	-6.0	150/300	2402	178	70	32	TBA
2400	2495	+1.0	-6.0	150/300	2609	178	80	32	TBA

NOTE: DN 80 to DN 1600 - PN 10 and PN16
DN 1800 to DN 2400 - PN 10

Materials of Construction - See Table 5 of Technical Manual

Dedicated Flange Adaptor - FA

DN 80 to DN1000 PN25 (40)*

Dimensions

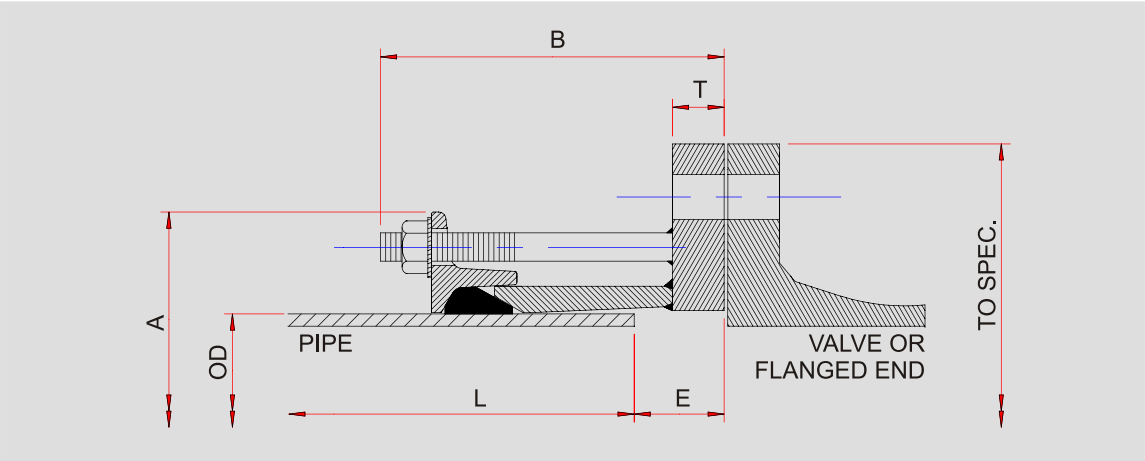

DUCTILE IRON PIPES

Nominal Bore (mm)	Pipe OD (mm)	Tolerance on Pipe OD for Prepared End (mm)		Minimum Pipe End Prepared Length L (mm)	OD of Endrings A (mm)	Flange Adaptor Length B (mm)	Table Flange Thickness T (mm)	Setting Gap E (mm)	Approx. Mass (kg)
80	98	+1.0	-3.0	100	165	104	14	19	4
100	118	+1.0	-3.0	100	200	104	14	19	5
125	144	+1.0	-3.0	100	220	104	14	19	7
150	170	+1.0	-3.0	100	260	108	18	19	8
200	222	+1.0	-3.5	100	308	113	23	19	10
250	274	+1.0	-3.5	100	364	113	23	19	15
300	326	+1.0	-3.5	100	414	113 (118)*	23 (28)*	19	17
350	378	+1.0	-3.5	150	480	168	28	32	32
400	429	+1.0	-4.0	150	531	168	28	32	38
450	480	+1.0	-4.0	150	582	168	28	32	43
500	532	+1.0	-4.0	150	634	168 (170)*	28 (30)*	32	53
600	635	+1.0	-4.5	150	737	168 (178)*	28 (38)*	32	67
700	738	+1.0	-4.5	150	854	168	28	32	67
800	842	+1.0	-4.5	150	958	168	28	32	78
900	945	+1.0	-5.0	150	1061	168	28	32	82
1000	1048	+1.0	-5.0	150	1164	178	38	32	109

NOTE: DN 80 to DN 600 - PN 25 and PN 40
DN 700 to DN 1000 - PN 25

Materials of Construction - See Table 5 of Technical Manual

Dedicated Flange Adaptor

Restrained Flange Adaptor

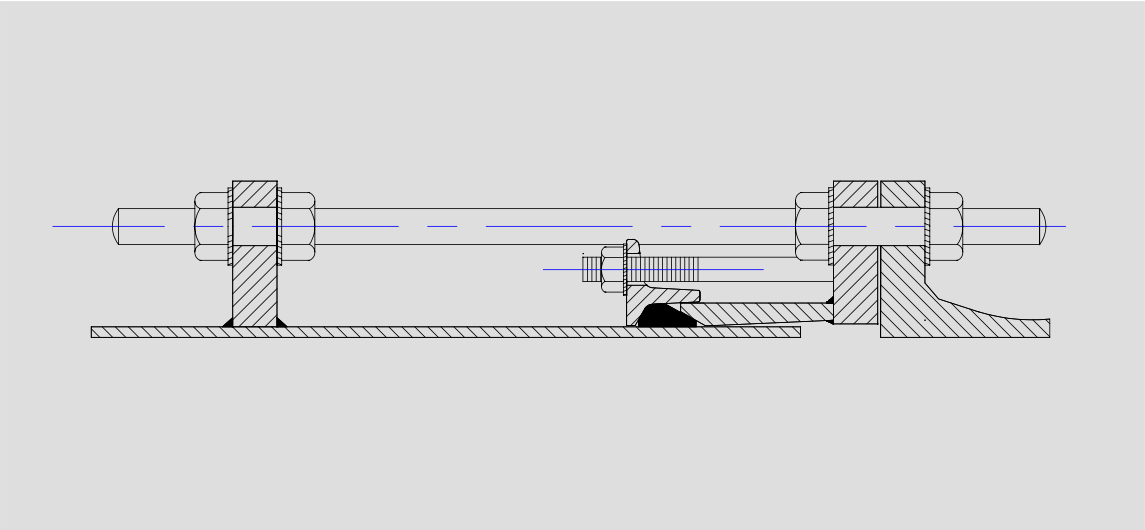

KLAMFLEX Restraint Flange adaptors can be manufactured where end pull out is of concern.

Stepped Flange Adaptor with Profile Plate

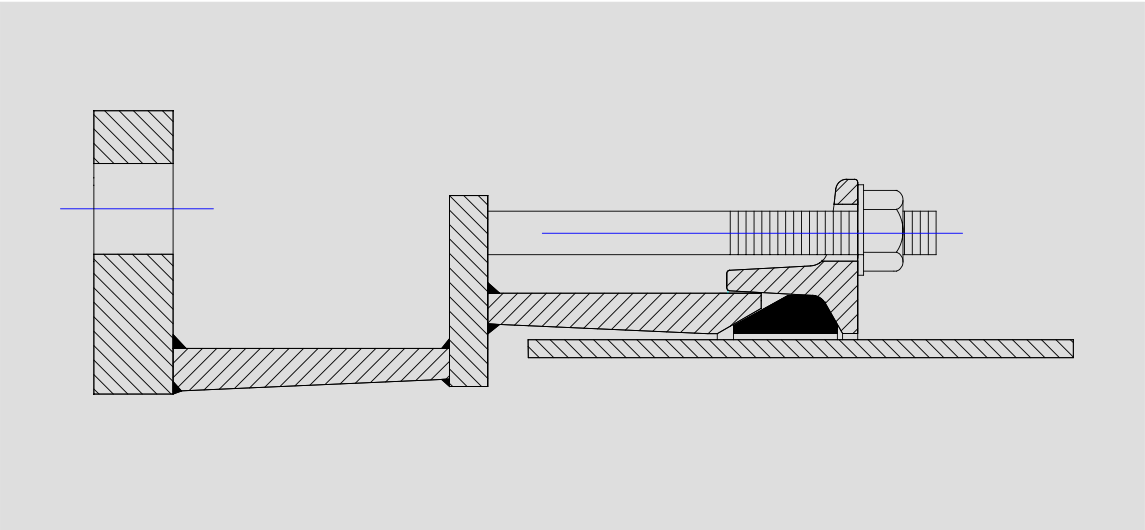

KLAMFLEX Stepped Flange Adaptors can be manufactured where pipe DN is larger (as indicated above) or smaller than flange nominal bore.

DISMANTLING JOINT - DJ

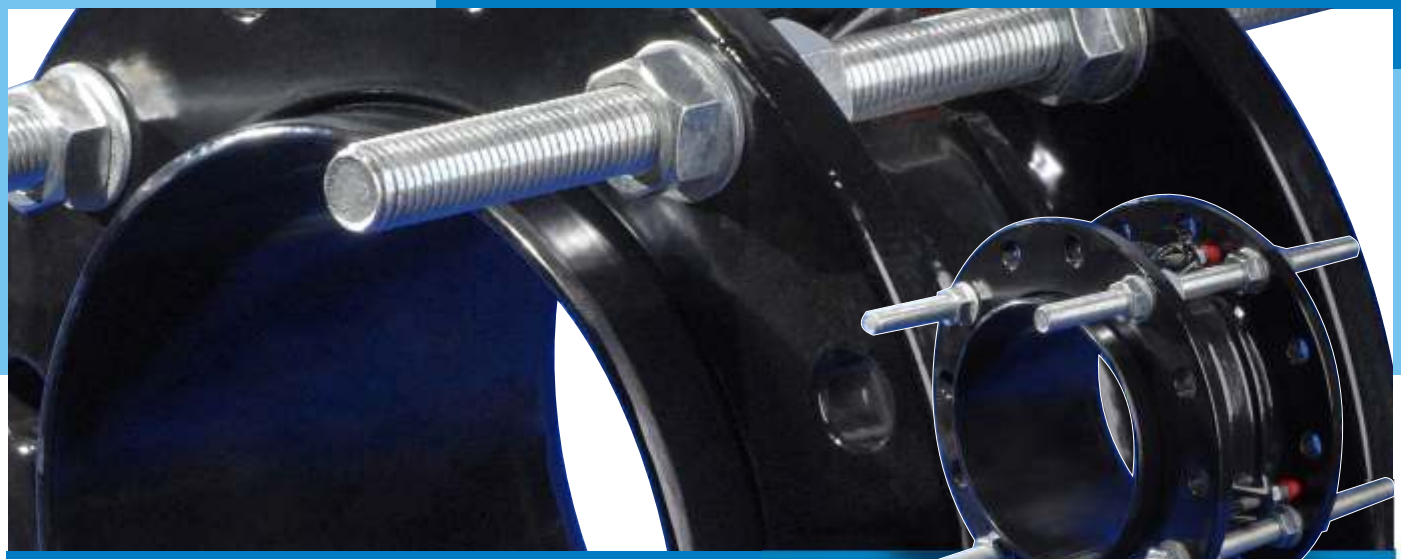

Product Features

Manufactured to AWWA C219 under quality management systems accredited to ISO 9001:2000, the KLAMFLEX Dismantling Joint assembly is a double flanged composite fitting featuring a telescopic action between a flanged spigot and a flange adaptor.

The joint is designed to provide longitudinal adjustment in flanged pipe systems, and was developed to provide greater versatility for designing and engineering at the planning stages for the installation of flanged pipe work systems and to assist in plant maintenance.

Dismantling Joints provide a simple method for the installation and removal of flanged valves, pumps, flow meters, flanged pipes and pipe fittings. Tie rods are provided for final anchoring and location and these also double as mating flange jointing bolts, reducing the number of these required.

The Dismantling Joint range from KLAMFLEX extends from 50mm to 3000mm and whilst the chart indicates flange ratings of PN10/16/25, all common drillings are available in pressures up to 40 BAR.

The range indicated is typical and KLAMFLEX can manufacture to specific customer specifications and dimensions, on request.

Thickness of Klamflex flanges will not necessarily be the same as the mating flange. Flanges and flange adaptors will not be subject to full end or side thrust, most of which is absorbed by the flexibility in the rubber gaskets.

Installation is extremely simple and is generally done with the flange adaptor end connected to the valve.

STUDS & TIE RODS

Studs: Stainless Steel 304 and Tie Rods. Galvanised low carbon steel bolts and nuts (Stainless Steel 316 on request)

COATING & RUBBER

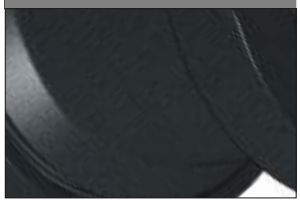

Non-toxic WRAS approved EPDM rubber - Non-toxic

DRILLING

Flange Drilling according to international standards: SANS, BS EN ASME, AWWA and others.

BODY & END RING

Ductile Iron or Rolled Steel

Dismantling Joint - DJ

DN50 to DN350

Dimensions

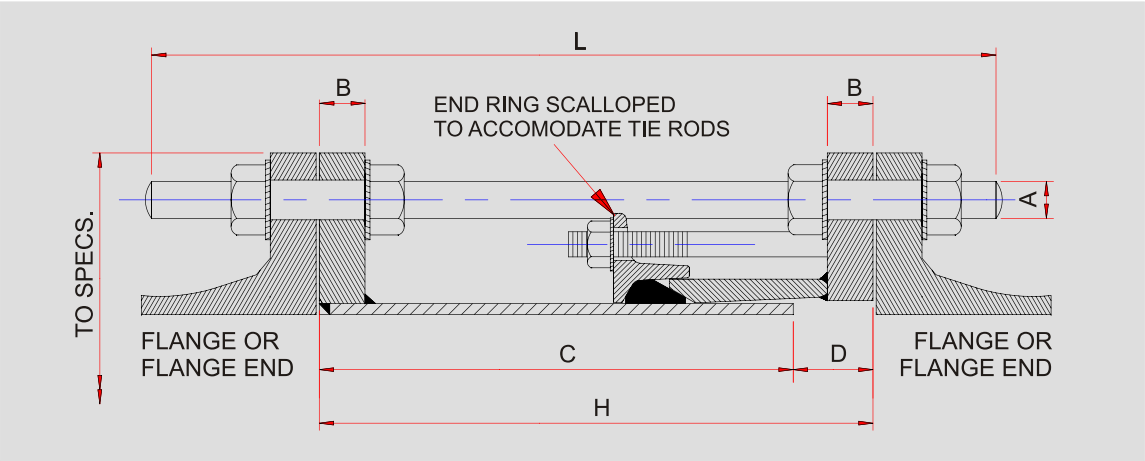

DISMANTLING JOINT

Flange Details					Flange to Flange Details				Tie Rod Details		
Nominal Bore of Joint (mm)	Flange PN Rating (bar)	Spigot Pipe O.D. +/- (mm)	Spigot Pipe Wall Thick (mm)	C Spigot Length Including Flange (mm)	B Adaptor & Spigot Flange Thickness (mm)	H - MIN Length Of Joint (mm)	C + D Recom. Joint Length (mm)	H - MAX Length Of Joint (mm)	Tie Rod (qty)	Tie Rod Size & Length A x L (mm)	Approx Mass (kg)
50	PN 10/16/25/40	60	4.5	165	10,10,14,14	165	185	205	4	M16 x 300	9
65	PN 10/16/25/40	76	4.5	165	10,10,14,14	165	185	205	4	M16 x 300 (320)*	10
80	PN 10/16/25/40	89	4.5	165	10,10,14,14	165	185	205	4	M16 x 300 (320)*	12
100	PN 10/16	114	4.5	165	10	165	185	205	4	M16 x 320	13
100	PN 25/40	114	4.5	165	14	165	185	205	4	M20 x 330	14
125	PN 10/16	140	4.5	165	14	165	185	205	4	M16 x 320	16
125	PN 25/40	140	4.5	175	18	175	195	215	4	M24 x 350	18
150	PN 10/16	165	4.5	165	14	165	185	205	4	M20 x 330	23
150	PN 25/40	165	4.5	175	18	175	195	215	4	M24 x 350	28
200	PN 10/16	219	4.5	165	18	165	185	205	4	M20 x 330	32
200	PN 25	219	4.5	175	23	175	195	215	4	M24 x 350	37
200	PN 40	219	4.5	175	23	175	195	215	4	M27 x 370	41
200	4000/3	219	4.5	175	23	175	195	214	4	M24 x 360	40
250	PN 10	273	4.5	175	18	175	195	215	4	M20 x 330	34
250	PN 16	273	4.5	175	18	175	195	215	4	M24 x 350	38
250	PN 25	273	4.5	185	23	185	205	225	4	M27 x 380	45
250	2500/T3	273	4.5	185	23	185	205	225	4	M24 x 370	45
250	PN 40	273	4.5	185	23	185	205	225	4	M30 x 410	49
300	PN 10	324	4.5	175	18	175	195	215	4	M20 x 330	43
300	PN 16	324	4.5	175	18	175	195	215	4	M24 x 350	44
300	PN 25	324	4.5	185	23	185	205	225	4	M27 x 400	50
300	2500/T3	324	4.5	185	23	185	205	225	4	M24 x 370	50
300	PN 40	324	4.5	185	28	185	205	225	4	M30 x 490	60
350	PN 10	356	4.5	250	23	250	275	300	4	M20 x 430	49
350	PN 16	356	4.5	250	23	250	275	300	4	M24 x 450	71
350	PN 25	356	4.5	250	28	250	275	300	4	M30 x 490	79
350	2500/T3	356	4.5	250	28	250	275	300	4	M30 x 515	79
350	PN 40	356	4.5	250	28	250	275	300	4	M33 x 540	86

NOTE: DN 50 to DN 600 - PN 10,16,25 and PN 40
DN 700 to DN 1000 - PN 10,16,25
DN 1200 to DN 1600 - PN 10 and PN 16
DN 1800 to DN 2400 - PN 10

Materials of Construction - See Table 5 of Technical Manual

Dismantling Joint - DJ

DN400 to DN600

Dimensions

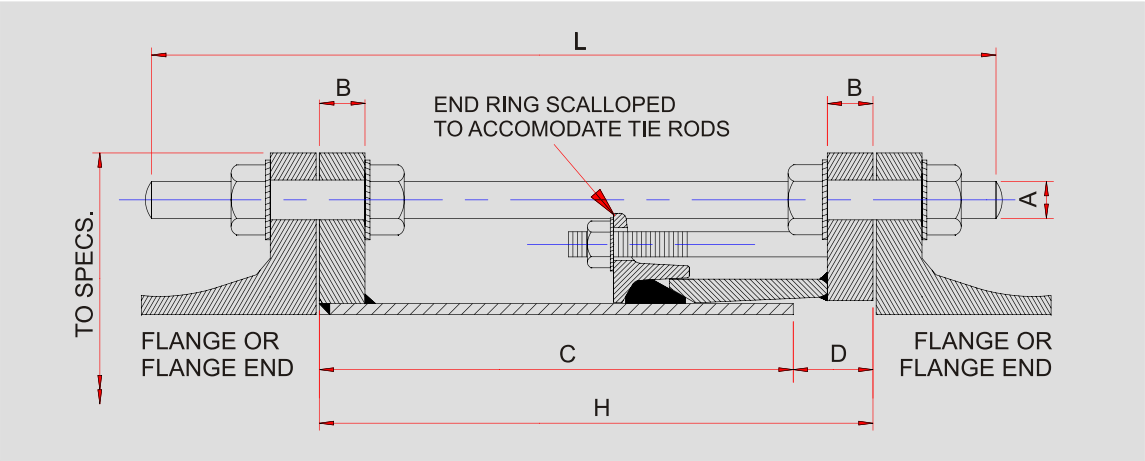

DISMANTLING JOINT

Flange Details					Flange to Flange Details				Tie Rod Details		
Nominal Bore of Joint (mm)	Flange PN Rating (bar)	Spigot Pipe O.D. +/- (mm)	Spigot Pipe Wall Thick (mm)	C Spigot Length Including Flange (mm)	B Adaptor & Spigot Flange Thickness (mm)	H - MIN Length Of Joint (mm)	C + D Recom. Joint Length (mm)	H - MAX Length Of Joint (mm)	Tie Rod (qty)	Tie Rod Size & Length A x L (mm)	Approx Mass (kg)
400	PN 10	406	4.5	250	23	250	275	300	4	M24 x 450	77
400	PN 16	406	4.5	250	23	250	275	300	4	M27 x 480	88
400	1600/T3	406	4.5	250	23	250	275	300	4	M24 x 450	88
400	PN 25	406	4.5	265	28	265	290	315	4	M33 x 545	96
400	2500/T3	406	4.5	265	28	265	290	315	4	M30 x 515	96
400	PN 40	406	4.5	265	28	265	290	315	4	M36 x 615	107
450	PN 10	457	4.5	250	23	250	275	300	4	M24 x 450	95
450	PN 16	457	4.5	250	23	250	275	300	4	M27 x 480	99
450	1600/T3	457	4.5	250	23	250	275	300	4	M24 x 450	99
450	PN 25	457	4.5	275	28	275	300	325	4	M33 x 545	111
450	2500/T3	457	4.5	275	28	275	300	325	4	M30 x 515	111
450	PN 40	457	4.5	275	28	275	300	325	4	M36 x 615	120
500	PN 10	508	4.5	250	23	250	275	300	4	M24 x 450	111
500	PN 16	508	4.5	250	23	250	275	300	4	M30 x 490	131
500	PN 25	508	6	280	28	280	305	325	4	M33 x 545	143
500	2500/T3	508	6	280	28	280	305	325	4	M30 x 515	143
500	PN 40	508	6	280	30	280	305	325	4	M39 X 645	154
500	4000/3	508	6	280	30	280	305	325	4	M36 x 615	154
600	PN 10	610	4.5	250	23	250	275	300	4	M27 x 480	135
600	1000/3	610	4.5	250	23	250	275	300	4	M24 x 455	135
600	PN 16	610	4.5	250	23	250	275	300	4	M33 x 505	175
600	1600/3	610	4.5	250	23	250	275	300	4	M30 x 485	175
600	PN 25	610	6	300	28	300	325	350	4	M36 x 615	205
600	PN 40	610	6	300	38	300	325	350	4	M45 x 695	248

NOTE: DN 50 to DN 600 - PN 10,16,25 and PN 40
DN 700 to DN 1000 - PN 10,16,25
DN 1200 to DN 1600 - PN 10 and PN 16
DN 1800 to DN 2400 - PN 10

Materials of Construction - See Table 5 of Technical Manual

Dismantling Joint - DJ

DN700 to DN2400

Dimensions

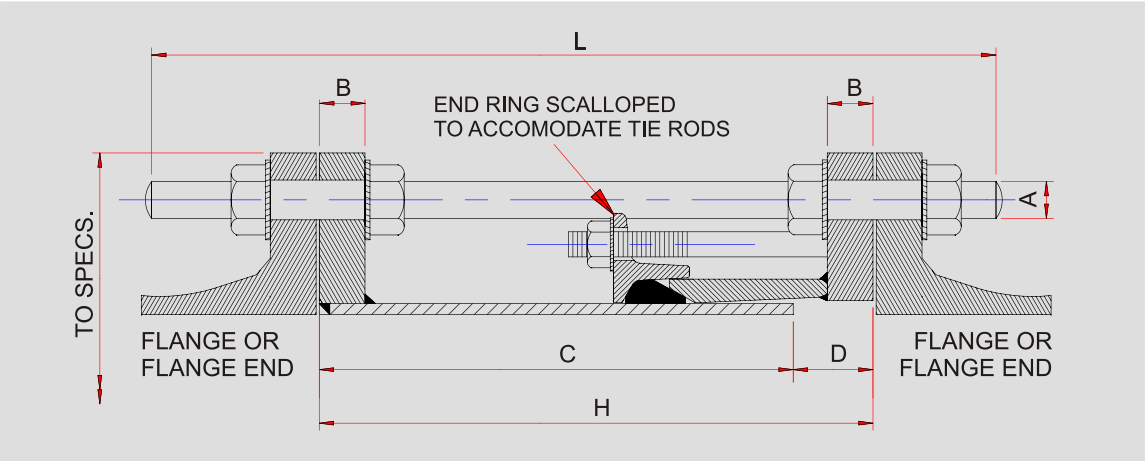

DISMANTLING JOINT

Flange Details					Flange to Flange Details				Tie Rod Details		
Nominal Bore of Joint (mm)	Flange PN Rating (bar)	Spigot Pipe O.D. +/- (mm)	Spigot Pipe Wall Thick (mm)	C Spigot Length Including Flange (mm)	B Adaptor & Spigot Flange Thickness (mm)	H - MIN Length Of Joint (mm)	C + D Recom. Joint Length (mm)	H - MAX Length Of Joint (mm)	Tie Rod (qty)	Tie Rod Size & Length A x L (mm)	Approx Mass (kg)
700	PN 10	711	6	250	23	250	275	300	4	M27 x 485	168
700	1000/3	711	6	250	23	250	275	300	4	M24 x 455	184
700	PN 16	711	6	250	23	250	275	300	4	M33 x 505	184
700	1600/3	711	6	250	23	250	275	300	4	M30 x 515	210
700	PN 25	711	8	320	28	320	345	370	6	M39 x 645	210
700	PN 40	711	8	320	38	320	345	370	6	M45 x 765	260
800	PN 10	813	6	250	23	250	275	300	4	M30 x 500	203
800	PN 16	813	6	250	23	250	275	300	6	M36 x 550	222
800	PN 25	813	8	330	28	330	360	390	6	M45 x 700	243
900	PN 10	914	6	250	23	250	275	300	7	M30 x 520	225
900	PN 16	914	6	250	23	250	275	300	7	M36 x 570	245
900	PN 25	914	10	340	28	340	370	400	7	M45 x 730	298
1000	PN 10	1016	6	260	28	260	290	320	7	M33 x 550	298
1000	1000/3	1016	6	260	28	260	290	320	7	M30 x 550	298
1000	PN 16	1016	6	260	28	260	290	320	7	M39 x 610	331
1000	1600/3	1016	6	260	28	260	290	320	7	M36 x 600	331
1000	PN 25	1016	8	360	38	360	390	410	7	M52 x 780	376
1200	PN 10	1219	8	280	30	280	310	340	8	M36 x 610	496
1200	PN 16	1219	8	280	38	280	310	340	8	M45 x 680	559
1200	PN 25	1219	10	390	38	390	420	450	8	M52 x 850	635
1400	PN 10	1420	8	310	30	310	340	370	9	M39 x 670	610
1400	PN 16	1420	10	310	38	310	340	370	9	M45 x 730	665
1600	PN 10	1620	10	350	50	350	380	410	8	M45 x 750	1250
1600	PN 16	1620	10	350	60	350	380	410	8	M52 x 850	1320
1800	PN 10	1820	10	350	60	350	380	410	11	M45 x 750	1300
2000	PN 10	2020	12	350	70	350	380	410	12	M45 x 800	1490
2200	PN 10	2232	16	380	70	380	410	440	13	M52 x 980	TBA
2400	PN 10	2432	16	400	80	400	430	460	14	M52 x 1050	TBA

NOTE: DN 50 to DN 600 - PN 10,16,25 and PN 40
DN 700 to DN 1000 - PN 10,16,25
DN 1200 to DN 1600 - PN 10 and PN 16
DN 1800 to DN 2400 - PN 10

Materials of Construction - See Table 5 of Technical Manual

JUNIOR FITTINGS

Product Features

A small bore product range specifically designed for use on threaded and plain ended steel service lines.

DN15 to DN50 (PN16)

PRODUCT SPECIFICATION	
Sizes are available for the following pipe sizes:	
Description	**Size Range**
Junior Straight Couplings	15-50 mm
Junior Straight Couplings with Integral gripper rings	15-50 mm
Male/Female Junior Couplings	15-50mm
Male/Female Junior Couplings with integral gripper rings	15-50 mm
Junior Tee Pieces	15-25 mm
Junior Tees with integral gripper rings	15-25 mm
Junior Repair Clamps	15-50mm
Junior Repair Clamp with Tee Outlet	15-25mm

Materials of Construction - See Table 5 of Technical Manual

RANGER END CAPS - RE

Product Features

KLAMFLEX Ranger End Caps are manufactured from our Ranger Couplings, therefore giving you the versatility of using them on a variety of different pipe OD's and materials.

KLAMFLEX Ranger End Caps are therefore suitable for all popular standard pipe sizes ranging from 50mm to 600mm and are designed for the use in air, water, sewer, and gas pipelines up to 16 Bar.

Corrosion protection for KLAMFLEX Ranger Coupling is available in Fusion Bonded Epoxy, Red Oxide Primer and Galvanised finish as standard. Optional coatings to customer specifications are available on request. KLAMFLEX Ranger Couplings have applications in the reticulation of potable water, waste water and sewage as well as in the marine, mining, oil, gas and general engineering sectors. Moulded, circumferentially ribbed or specially profiled gaskets, generally in EPDM or NBR materials, provide for smooth installation by minimising contact friction. KLAMFLEX Ranger Coupling Gaskets are designed to provide a leak tight seal across the O.D range per nominal size and still allow for thermal expansion and contraction of the pipe up to 5mm per gasket, facilitated through gasket deformation.

KLAMFLEX Ranger End Caps are NOT DESIGNED TO RESIST END LOAD due to pressure forces and therefore such forces must normally be resisted by other means

* Can be fitted with a threaders offtake for pressure monitoring or pressure testing

Ranger End Caps - RE

DN50 to DN600 (PN16)

Specifications

DN (mm)	Pipe OD (mm)	Approx. Mass (kg)	Pipe Material Suitability
50/2	59-72	3	STEEL (imperial+metric), UPVC, DI, CI, AC (imperial), ABS/DWV
65/2.5	72-85	3	STEEL (imperial+metric), UPVC, DI, CI, AC (imperial), ABS/DWV
80/3	88-103	4	STEEL (imperial+metric), UPVC, DI, CI, AC (imperial), ABS/DWV
100/4	109-128	5	STEEL (imperial+metric), UPVC, DI, CI, AC (cod), AC (imperial), GRP
125/5	138-153	5	STEEL (imperial+metric), UPVC, DI, CI, AC (cod), AC (imperial)
150/6	150-170	7	STEEL (imperial+metric), UPVC, DI, GRP, AC (cod), AC (cid)
150/6	159-182	7	STEEL (imperial+metric), UPVC, DI, CI, AC (cod), AC (cid), AC (imperial), GRP
175/7	192-210	9	STEEL (imperial+metric), UPVC, CI, AC (imperial)
200/8	218-235	10	STEEL (imperial+metric), UPVC, DI, CI, AC (cod), AC (cid), AC (imperial), GRP
225/9	230-247	17	STEEL (imperial+metric), DI, AC (cod), AC (cid), AC (imperial)
225/9	242-262	13	UPVC, AC (cid)
250/10	250-267	18	STEEL (imperial+metric), UPVC, AC (cid)
250/10	272-289	16	STEEL (imperial+metric), UPVC, DI, CI, AC (cod), AC (cid), AC (imperial), GRP
300/12	315-332	24	STEEL (imperial+metric), UPVC, DI, GRP
300/12	322-340	20	STEEL (imperial+metric), DI, AC Class 12
300/12	340-360	17	UPVC, DI, AC (cod), AC (cid), AC (Metric), CI
350/14	351-378	17	STEEL (imperial+metric), UPVC, AC (cid), AC (metric), CI
350/14	374-391	28	DI, GRP, AC Class 6
400/16	390-410	18	STEEL (imperial+metric), UPVC, AC (cid), AC (metric), CI
400/16	417-437	26	DI, AC Class 6 and 12
450/18	454-460	35	STEEL, AC Class 18
450/18	476-493	40	DI, AC (cid), AC (metric), AC Class 6 and 12, Imperial CI/CL
450/18	480-500	33	DI, AC Class 6 and 12, UPVC
500/20	500-508	51	UPVC, Steel, AC (cod), AC (cid)
500/20	526-546	35	DI, AC Class 6 and 12
600/24	608-636	62	STEEL (imperial+metric), GRP, CI
600/24	628-650	46	DI, AC Class 6, Imperial CI/CL

MAX WORKING PRESSURE: 16 BAR
TOLERANCE ON ANGULAR DEFLECTION: 3 DEGREES
EXPANSION & CONTRACTION RANGE: 2 - 5 mm
RECOMMENDED BOLT TORQUE: 60 - 80 Nm
FOR END CAPS OF 25 & 40 BAR WORKING PRESSURE PLEASE CONTACT KLAMFLEX

Materials of Construction - See Table 5 of Technical Manual

Pipe OD Chart

Pipe Outside Diameters Of Common Pipe Materials

ALL DIMENSIONS ARE IN MILLIMETRES (mm)

TABLE 6

PIPE DN	mm	15	20	25	32	40	50	65	80	100	125	150	175	200	225	250	300	350	400	450	500	550	600	650	700	750	800	850	900	1000	1050	1100	1200	1300	1400	1500	1600	1800	2000
	inches	0.5	0.75	1	1.25	1.5	2	2.5	3	4	5	6	7	8	9	10	12	14	16	18	20	22	24	26	28	30	32	34	36	40	42	44	48	52	56		64	72	80
STEEL BS 1387		21.3	26.9	33.7	42.4	48.3	60.3	76.1	88.9	114.3	139.7	165.1																											
STEEL SABS 62 MEDIUM	max	21.7	27.2	34.2	42.9	48.8	60.8	76.6	89.5	114.9	140.6	166.1																											
STEEL SABS 719														219.1		273.1	323.9	355.6	406.4	457	508	559	610	660	711	762	813	864	914	1016	1067	1118	1219	1321	1422		1626	1829	2032
STEEL ISO 4200 SER 1		21.3	26.9	33.7	42.4	48.3	60.3	76.1	88.9	114.3	139.7	168.3		219.1		273.0	323.9	355.6	406.4	457	508		610		711		813		914	1016	1067	1118	1219		1422		1626	1829	2032
STEEL API 5 L		21.4	26.7	33.4	42.4	48.3	60.3	73.0	88.9	114.3	141.3	168.3		219.1		273.1	323.9	355.6	406.4	457.2	508	559	609.6	660.4	711.2	762	812.8	863.6	914.4	1016	1066.8	1117.6	1219.2	1320.8	1422.4		1625.6	1828.8	2032
STEEL BS 3600/3601		21.4	26.8	33.6	42.3	48.3	60.4	76.1	88.9	114.3	139.7	168.3	193.7	219.1	244.5	273.0	323.9	355.6	406.4	457.0	508	559	610	660	711	762	813	864	914	1016			1219		1422		1626	1829	2032
DUCTILE IRON ISO 2531 : BS 4772									98.0	118.0	144.0	170.0		222.0		274.0	326.0	378.0	429.0	480.0	532		635		738		842		945	1048			1255		1462		1668	1875	2080
GRP (O.D. Can Vary by Manufacturer)	max									116		168		220.5		272.1	327	379	413	464	515		617		719		821		924	1025			1229		1433		1637	1841	2045
ASBESTOS CEMENT C.O.D. (South Africa)							69		96	122	150	177		232		286	345	426		507	587		667																
ASBESTOS CEMENT C.I.D. (South Africa)	CL6																	378	430	483	535		638		744		850		956+	1062									
ASBESTOS CEMENT C.I.D. (South Africa)	CL12											168		222		274	328	382	436	488	543		651		760		868		976	1084									
ASBESTOS CEMENT C.I.D. (South Africa)	CL18											174		229		284	340	396	450	506	560		672		784		896		1008	1120									
ASBESTOS CEMENT C.I.D. (South Africa)	CL24											180		239		295	353	412	468	524	583		699		816		932		1048	1165									
ASBESTOS CEMENT C.I.D. (South Africa)	CL30											188		250		304	365	426	484	545	606		727																
ASBESTOS CEMENT C.I.D. (South Africa)	CL36											196		262		318	378	440	503	566	629		755																
ASBESTOS CEMENT METRIC BS 486	CL15											177		232	259	286	334	392	448	498	568		654		761		808		927	970									
ASBESTOS CEMENT METRIC BS 486	CL18							86	106	126		178		234		288	344	402	456	508	560		668		780		888		1000	1110		1214	1320	1430	1540	1650			
ASBESTOS CEMENT METRIC BS 486	CL20													232	259	286	345	405	463	515	586		672		780		830		952	996									
ASBESTOS CEMENT METRIC BS 486	CL25						69		96	122		177		240	268	295	356	419	478	532	605	598	691	703	801	807	852	912	977	1024	1121	1172	1277						
IMP CAST IRON ASBESTOS CEMENT	CL AB					55.9	69.1	82.3	95.5	121.9	149.9	177.3	204.7	232.2	259.1	286	333.8	378	439	492	545	613.7	650	720.3	755	826	860		964	1068	1143		1300.5						
IMP CAST IRON ASBESTOS CEMENT	CL CD					55.9	69.1	82.3	95.5	121.9	149.9	177.3	204.7	232.2	259.1	286	345.4	399.3	453.1	506.9	560.3		667		773.2		879.3		984.5	1090.2									

UPVC, MPVC, PE, HDP	THESE PIPES ARE QUOTED USING THE SAME DIMENSION FOR NOMINAL BORE AS PIPE OUTSIDE DIAMETER																																
	16	20	25	32	40	50	63	75	90	110	125	140	160	180	200	225	250	280	315	355	400	450	500	560	630	710	800	900	1000	1200	1400	1600	1800	2000

TO ASSIST US IN MAKING THE CORRECT PRODUCT SELECTION FOR YOU PLEASE PROVIDE AS MUCH OF THE FOLLOWING INFORMATION AS POSSIBLE

(I) PIPE OUTSIDE DIAMETER OR PIPE MATERIAL AND CLASS

(II) WORKING PRESSURE

(III) MATCHING FLANGE DRILLING FOR FLANGE ADAPTORS AND DISMANTLING JOINTS

(IV) PRODUCT IN SYSTEM (WATER, SEWAGE, CHEMICALS, GAS, AIR, OIL ETC)

(V) FLUID / GAS TEMPERATURE IF AVAILABLE

(VI) AC PIPE SIZES ARE FOR REAMED ENDS

Product Range

Ranger Coupling

Ranger Coupling
Stainless Steel Sleeve

Ranger Flange Adaptor

Ranger Step Coupling

Dedicated Step Coupling

Gripper Coupling

Gripper Flange Adaptor

Gripper Flange Adaptor
Cast Steel

Dismantling Joint

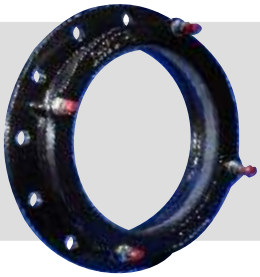

Dedicated Flange Adaptor

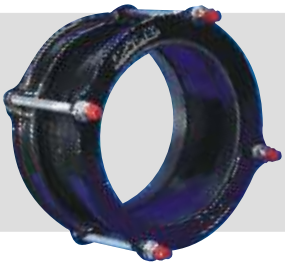

Dedicated Coupling

Ranger End Caps

Shouldered Coupling

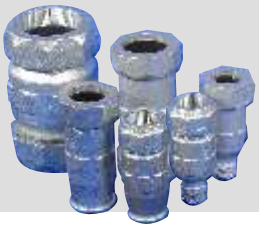

Junior Coupling

Socket Joint

SABS
ISO 9001

WRAS APPROVED PRODUCT

ARPAL

VAG
KLAMFLEX

KLAMFLEX PIPE COUPLINGS (PTY) LTD RESERVES THE RIGHT TO MODIFY THE SPECIFICATIONS AND INFORMATION CONTAINED WITHIN THIS MANUAL DUE TO PRODUCT RESEARCH, DEVELOPMENT AND IMPROVEMENTS